PRIDE® MOBILITY

Owner's Manual

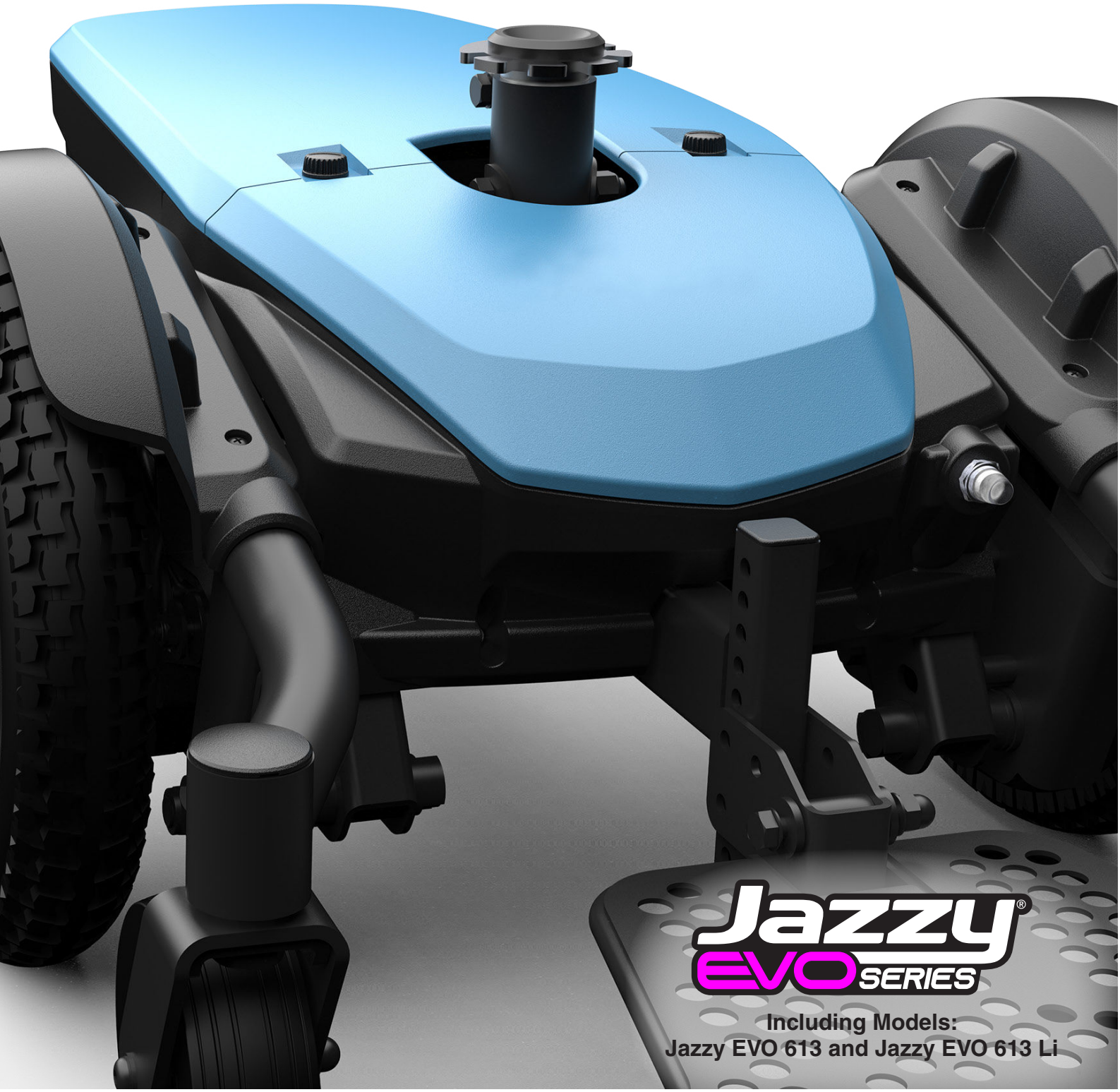

Jazzy® EVO SERIES

Including Models:
Jazzy EVO 613 and Jazzy EVO 613 Li

SAFETY GUIDELINES

WARNING! An authorized Pride Provider or a qualified technician must perform the initial setup of this power chair and must perform all of the procedures in this manual.

The symbols below are used throughout this owner's manual and on the power chair to identify warnings and important information. It is very important for you to read them and understand them completely.

WARNING! Indicates a potentially hazardous condition/situation. Failure to follow designated procedures can cause either personal injury, component damage, or malfunction. On the product, this icon is represented as a black symbol on a yellow triangle with a black border.

MANDATORY! These actions should be performed as specified. Failure to perform mandatory actions can cause personal injury and/or equipment damage. On the product, this icon is represented as a white symbol on a blue dot with a white border.

PROHIBITED! These actions are prohibited. These actions should not be performed at any time or in any circumstances. Performing a prohibited action can cause personal injury and/or equipment damage. On the product, this icon is represented as a black symbol with a red circle and red slash.

Intended Use

The intended use of the Pride Mobility Products device is to provide mobility to persons limited to a seated position that have the capacity of operating a powered wheelchair.

Regarding Devices for Prescription Use

CAUTION! Federal law restricts this device to sale by or on the order of a physician or other certified personnel licensed by the law of the State (US only) or region in which this personnel practices to use or order the use of the device.

Quick Reference Information

Authorized Pride Provider: _____

Address: _____

Telephone: _____

Purchase Date: _____

NOTE: This owner's manual is compiled from the latest specifications and product information available at the time of publication. We reserve the right to make changes as they become necessary. Any changes to our products may cause slight variations between the illustrations and explanations in this manual and the product you have purchased. The latest/current version of this manual is available on our website.

NOTE: This product is compliant with WEEE, RoHS, and REACH directives and requirements.

NOTE: This product meets IPX4 classification (IEC 60529).

NOTE: This product and its components are not made with natural rubber latex. Consult with the manufacturer regarding any after-market accessories.

Copyright © 2021
INFMANU5239/Rev A/April 2021

CONTENTS

I. INTRODUCTION 4

II. SAFETY 5

III. YOUR POWER CHAIR 7

IV. ASSEMBLY 12

V. COMFORT ADJUSTMENTS 13

VI. BATTERIES AND CHARGING 19
SEALED LEAD ACID (SLA) (AGM/GEL-CELL) 19
LITHIUM 23

VII. CARE AND MAINTENANCE 28

ADVISORY STATEMENT REGARDING CERTAIN COMPONENTRY INCORPORATED BY THIRD-PARTY MANUFACTURERS INTO FINISHED POWER CHAIRS: When Pride power bases, seating systems, or other components are incorporated into a finished power chair manufactured or assembled by any third party, that third party is responsible to assure the safety, functionality, and legal compliance of the finished power chair. Pride makes no representation concerning the safety, functionality, or legal compliance of the finished power chair or its componentry manufactured by a third party. While Pride makes every effort to assure that our components are distributed responsibly, manufacturers, distributors, and consumers are reminded that finished power chairs must comply with a variety of standards and requirements for governmental safety and functionality.

If it is necessary to physically modify a power chair, including the addition of third-party componentry, to accommodate the medical needs of the power chair occupant, a risk assessment in conformance with ISO 14971, as outlined in ISO_DIS_7176-19 (preliminary release), should be performed.

Changes to power chairs that are likely to affect conformance and risk evaluation include but are not limited to: moving the securement-point brackets; lowering the back-support height; shortening the seat length; adding secondary postural supports that are not firmly attached to the power chair; adding components that have sharp edges (i.e., edges with less than 0.08 in. [2 mm] radius); or any change that compromises the structural integrity of the power chair frame.

LANGUAGE USAGE

This owner's manual is intended for distribution in all English-speaking countries where our Power Chairs are sold. We have chosen to compose this manual using language and spellings common to the USA. Since we recognize that not all English-speaking countries use the same words or spellings, please refer to the following chart for some common word variations that may be encountered throughout this manual.

USA	Variation	USA	Variation	USA	Variation
asphalt	tarmac	backward(s)	rearward(s)	center	centre
color	colour	cord	lead	curb	kerb
elevator	lift	meter	metre	provider	dealer; agent
sidewalk	pavement	tire	tyre	trunk	boot
turn signal	turn indicator	yard	grounds	wrench	spanner
caster	castor	pocketbook	handbag	counterclockwise	anticlockwise
authorized	authorised	path	footpath	path	bridleway
labor	labour				

I. INTRODUCTION

SAFETY

WELCOME to Pride Mobility Products (Pride). The power chair you have purchased combines state-of-the-art components with **safety**, comfort, and styling in mind. We are confident that these design features will provide you with the conveniences you expect during your daily activities. Once you understand how to **safely** operate and care for your power chair, it should give you years of trouble-free operation and service.

Read and **follow** all instructions, warnings, and notes in this manual before attempting to operate your power chair for the first time. You must also read all instructions, warnings, and notes contained in any supplemental instructional booklets for the controller, front riggings, and/or seating system that accompanied your power chair before initial operation. Your **safety** depends upon you, as well as your provider, caretaker, or healthcare professional in using good judgement.

If there is any information in this manual which you do not understand, or if you require additional assistance for setup or operation, please contact your authorized Pride Provider. **Failure to follow the instructions in this manual and those located on your power chair can lead to personal injury and/or damage to the power chair, and may void the warranty.**

PURCHASER'S AGREEMENT

By accepting delivery of this product, you promise that you will not change, alter, or modify this product or remove or render inoperable or unsafe any guards, shields, or other safety features of this product; fail, refuse, or neglect to install any retrofit kits from time to time provided by Pride to enhance or preserve the safe use of this product.

SHIPPING AND DELIVERY

Before using your power chair, make sure your delivery is complete as some components may be individually packaged. If you do not receive a complete delivery, please contact your authorized Pride Provider immediately. Where damage has occurred during transport, either to the packaging or content, please contact the delivery company responsible.

NOTE: If you ever lose or misplace your copy of this manual, contact us and we will be glad to send you a new one immediately.

II. SAFETY

PRODUCT SAFETY SYMBOLS

The symbols below are used on the power chair to identify warnings, mandatory actions, and prohibited actions. It is very important for you to read and understand them completely.

NOTE: There are more warnings identified and explained in the Consumer Safety Guide that is included with your power chair. Please become familiar with all the warnings and safety information found in the Consumer Safety Guide and refer to this resource often.

Read and follow the information in the owner's manual.

Locked and in drive mode

Place unit on level ground and stand to one side when changing from drive mode to freewheel mode or freewheel mode to drive mode.

Unlocked and in freewheel mode

Indicates UNOCCUPIED power chair securement points.

OR

Indicates power chair with similar label is not rated for occupied transit.

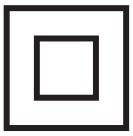

Class II Equipment

Manufactured in

Power Chair information label

II. SAFETY

GENERAL GUIDELINES

MANDATORY! Do not operate your new power chair for the first time without completely reading and understanding this owner's manual.

Your power chair is a state-of-the-art life-enhancement device designed to increase mobility. Pride provides an extensive variety of products to best fit the individual needs of the power chair user. Please be aware that the final selection and purchasing decision regarding the type of power chair to be used is the responsibility of the power chair user, who is capable of making such a decision, and his/her healthcare professional (i.e., medical doctor, physical therapist, etc.).

The contents of this manual are based on the expectation that a mobility device expert has properly fitted the power chair to the user and has assisted the prescribing healthcare professional and/or the authorized Pride Provider in the instruction process for the use of the product.

There are certain situations, including some medical conditions, where the power chair user will need to practice operating the power chair in the presence of a trained attendant. A trained attendant can be defined as a family member or care professional specially trained in assisting a power chair user in various daily living activities.

As you begin using your power chair during daily activities, you will probably encounter situations in which you will need some practice. Simply take your time and you will soon be in full and confident control as you maneuver through doorways, on and off of elevators, up and down ramps, and over moderate terrain.

Below are some precautions, tips, and other safety considerations that will help you become accustomed to operating your power chair safely.

Pre-Ride Safety Check

Get to know the feel of your power chair and its capabilities. Pride recommends that you perform a safety check before each use to make sure your power chair operates smoothly and safely.

WARNING! Never operate your power chair if it is behaving abnormally or erratically.

Perform the following inspections prior to using your power chair:

- Check for proper tire inflation. Maintain but do not exceed the psi/bar/kPa air pressure rating indicated on each tire if equipped with pneumatic tires.
- Check all electrical connections. Make sure they are tight and not corroded.
- Check all controller connections to the power base. Make sure they are secured properly.
- Check the brakes. See VII. "Care and Maintenance."
- Check battery charge. See VI. "Batteries and Charging."
- Ensure the manual freewheel levers are in drive mode before sitting on the power chair.

NOTE: If you discover a problem, contact your authorized Pride Provider for assistance.

III. YOUR POWER CHAIR

THE JAZZY EVO 613 POWER CHAIR

The Jazzy EVO 613 Power Chair has two main assemblies: the seat assembly (A) and the power base assembly (B). **See figure 1.** Typically, the seat assembly includes the armrests, seatback, and seat base. The power base assembly includes two motor/brake assemblies, two drive wheels, two batteries, and wiring harnesses. **See figures 1, and 2.**

Identification Key

1. Seatback
2. Armrest
3. Seat Base
4. Controller
5. Top Shroud
6. Main Circuit Breaker
7. Front Caster Wheel
8. Front Riggings (Foot Platform Shown)
9. Drive Wheel
10. Seat Release Lever
11. Rear Caster Wheels

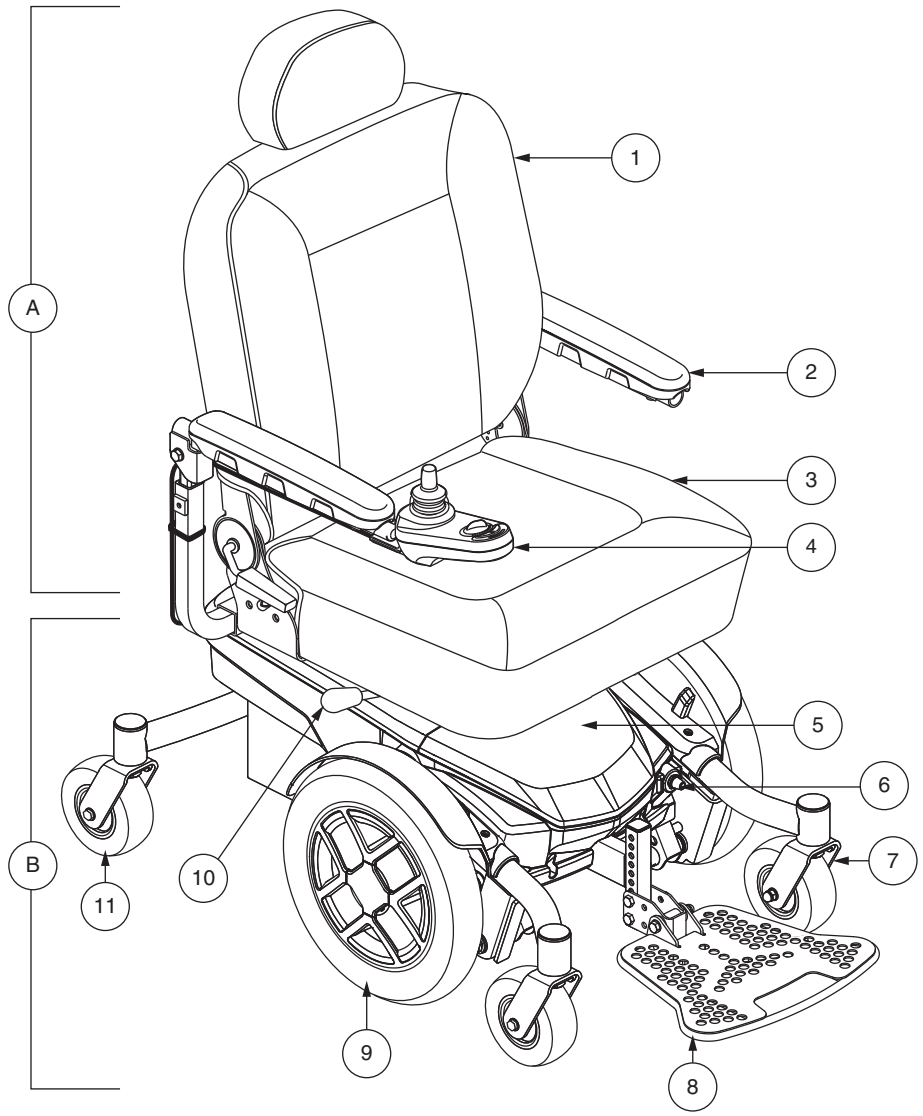

Figure 1. The Jazzy EVO 613 Power Chair

Identification Key

1. Rear Shroud
2. Seat Post
3. Top Shroud
4. Main Circuit Breaker
5. Front Caster Wheels
6. Controller Connector
7. Rear Caster Wheel

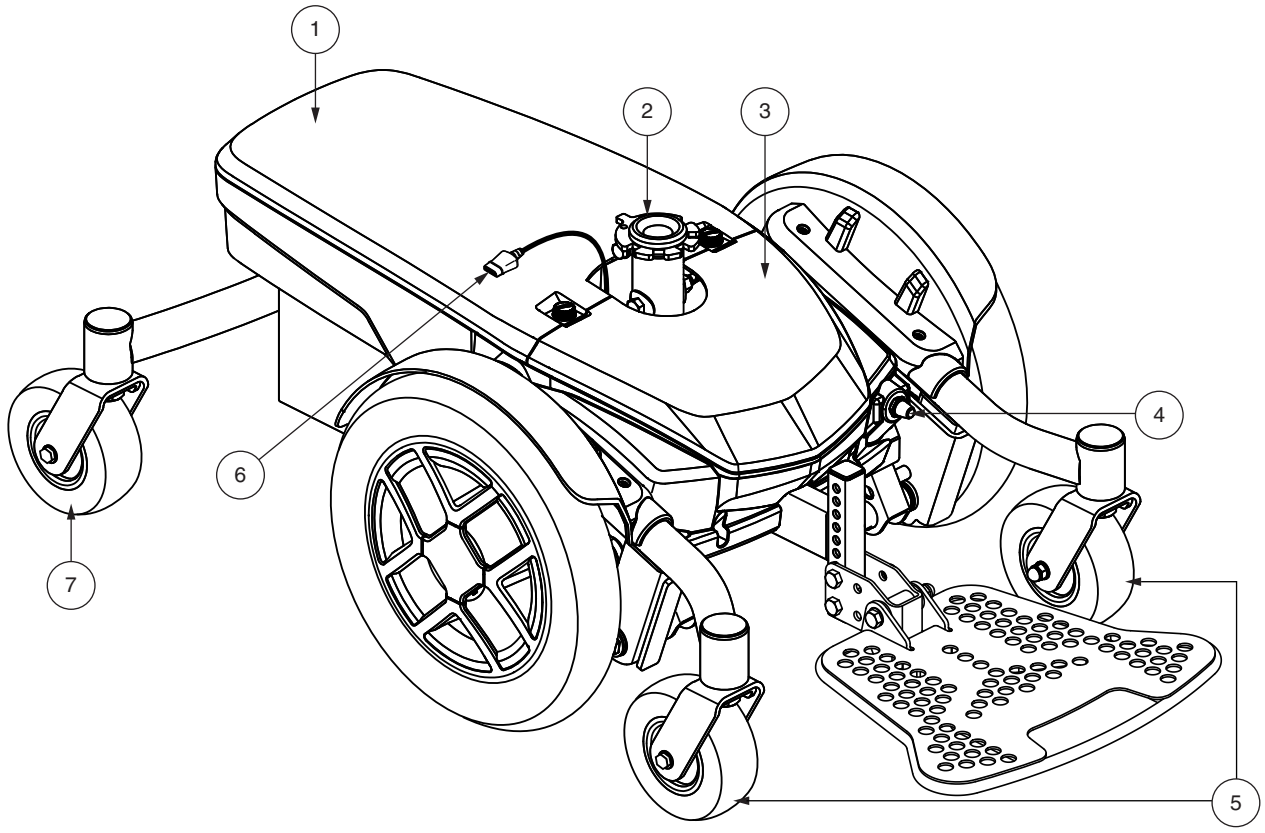

Figure 2. The Jazzy EVO 613 Power Base

Electrical Components

The electrical components are located either on or inside the power base. The main circuit breaker is located on the front of the power base. The power module is located under the front cover. **See figures 3 and 4.**

Main Circuit Breaker: The main circuit breaker is a safety feature built into your power chair. When the batteries and the motors are heavily strained (e.g., from excessive loads), the main circuit breaker trips to prevent damage to the motors and the electronics. If the circuit trips, allow your power chair to "rest" for approximately one minute. Next, push in the circuit breaker button, turn on the controller, and continue normal operation. If the main circuit breaker continues to trip repeatedly, contact your authorized Pride Provider.

Power Module: Provides connection between the joystick module and the motors, batteries, and off-board charger.

Identification Key

1. Battery Connectors
2. Controller Power Module
3. Controller Connector
4. Motor Connectors
5. Main Circuit Breaker

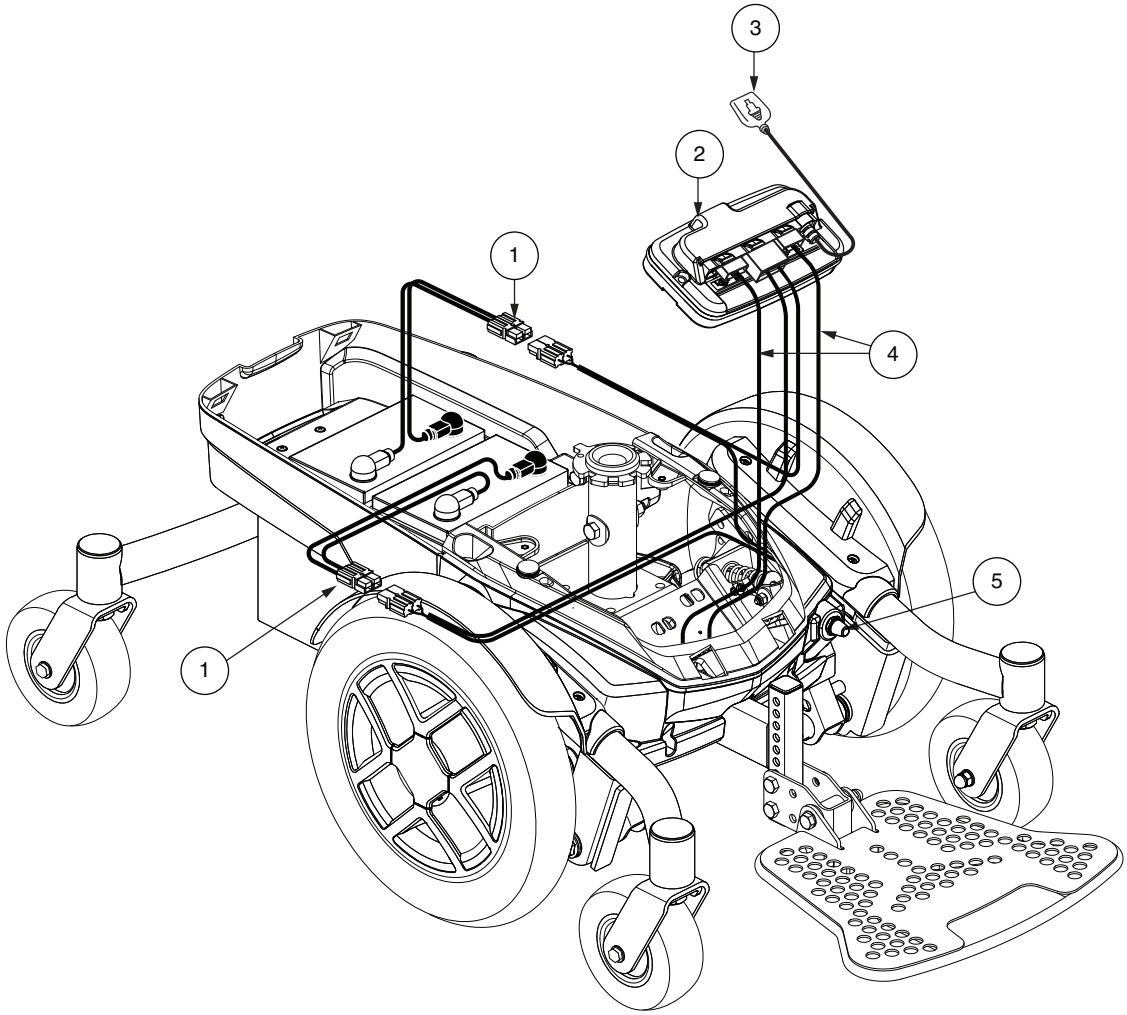

Figure 3. Jazzy EVO 613 with SLA Batteries Electrical Components

Identification Key

1. Battery Connectors
2. Controller Power Module
3. Controller Connector
4. Motor Connectors
5. Main Circuit Breaker

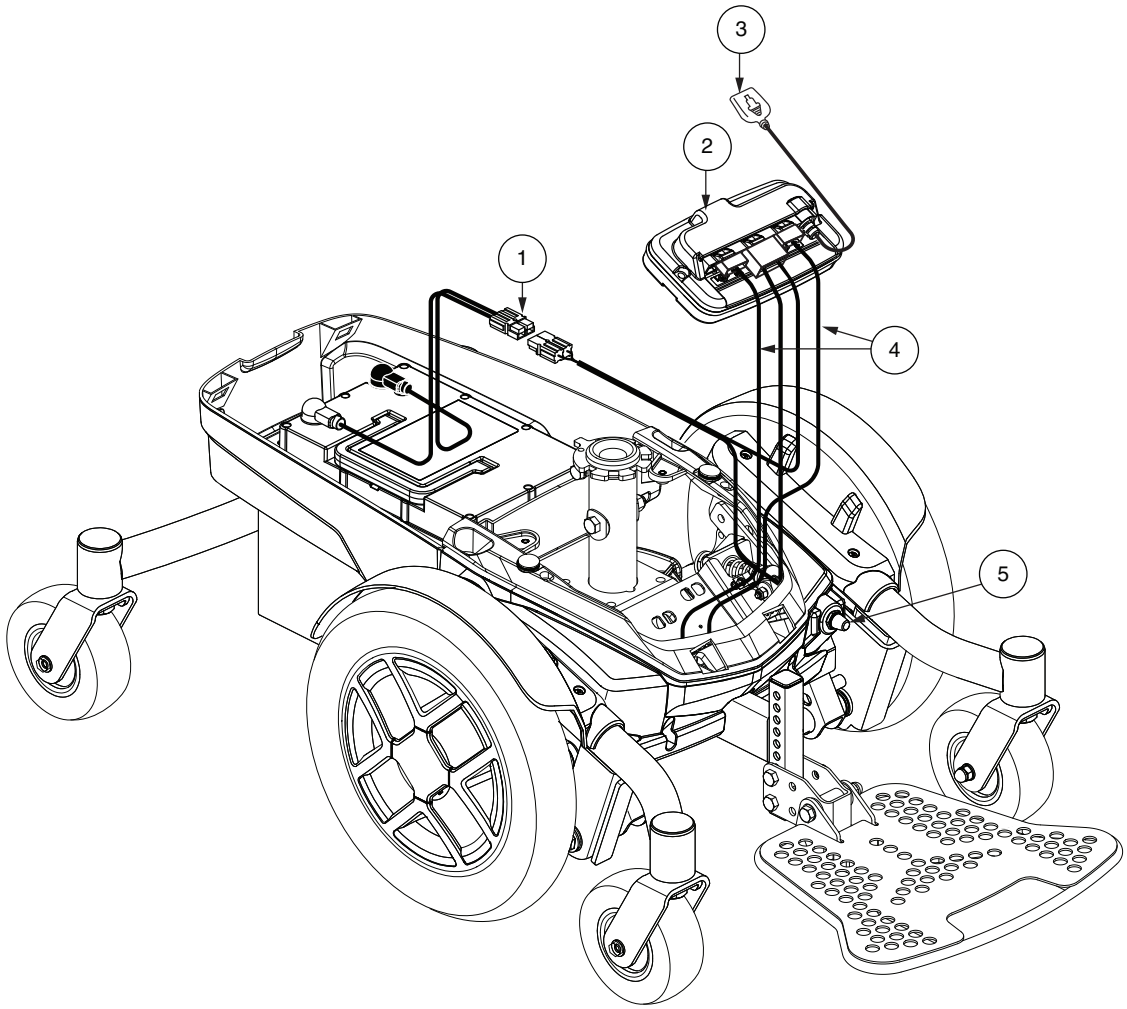

Figure 4. Jazzy EVO 613 Li with Lithium Batteries Electrical Components

Manual Freewheel Levers

Your power chair has a manual freewheel lever on each motor. Manual freewheel levers enable you to disengage the drive motors from the gearboxes and maneuver the chair manually.

WARNING! Do not use the power chair while the drive motors are disengaged! Do not disengage the drive motors when the power chair is on an incline or decline, as the unit could roll on its own. Only engage the freewheel mode when on a level surface.

WARNING! It is important to remember that when your power chair is in freewheel mode, the braking system is disengaged.

To engage or disengage the drive motors:

1. Locate the lever on each side of the power base.
2. Pull both levers upward to engage the drive motors (drive mode). **See figure 5.**
3. Push both levers downward to disengage the drive motors (freewheel mode). **See figure 6.**

If a lever is difficult to move in either direction, slightly rock the power chair back and forth. The lever should then move to the desired position.

WARNING! Avoid applying excessive force to the manual freewheel levers.

WARNING! Do not use your foot to operate the manual freewheel levers. Do not stand on the manual freewheel levers. Applying excessive force to the manual freewheel levers may result in damage to the freewheel levers, motors, and brakes.

WARNING! Do not use the freewheel lever handles as tie-down points to secure this product.

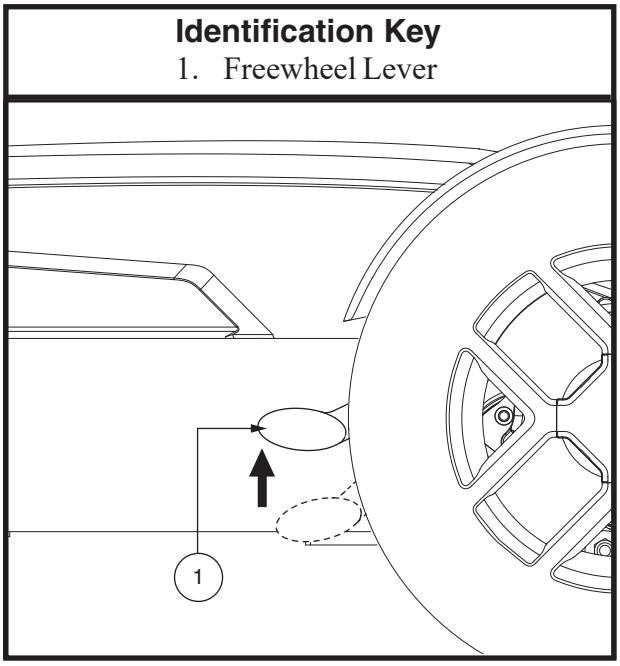

Figure 5. Drive Mode (Drive Engaged)

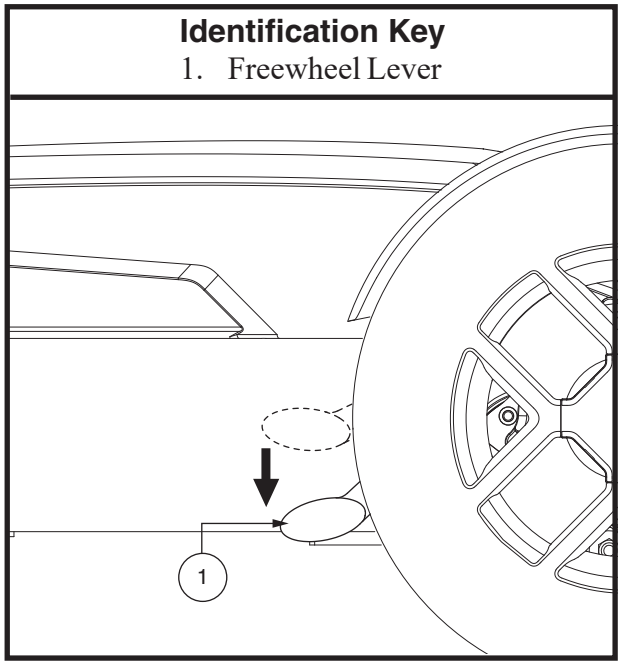

Figure 6. Freewheel Mode (Drive Disengaged)

INITIAL ASSEMBLY

Your power chair may require some assembly either before initial use or after transportation.

NOTE: Any nylon insert lock nut removed during the disassembly or adjustment of the power chair must be replaced with a new nylon insert lock nut. Nylon insert lock nuts should not be reused as it may cause damage to the nylon insert, resulting in a less secure fit. Replacement nylon insert lock nuts are available at local hardware stores or through your authorized Pride Provider.

Seat Installation

It may be necessary to install the seat either prior to initial operation or after transporting your power chair.

WARNING! Do not pick up the seat frame by the armrests. They are free to pivot, and you may lose control of the seat if they do so.

To install the seat:

1. Slide the seat down onto the power base. **See figure 7.**
2. Install the controller into one of the armrests. Tighten the setscrew with the supplied hex key.
3. Lift the armrest straight up, then route the controller harness and secure with wire ties as shown in **figure 7.**

NOTE: It is important that the armrest be lifted straight up prior to securing the controller harness with wire ties.

MANDATORY! Prevent controller harness damage! Avoid routing the controller harness on the outside of the armrest pad. Route the harness under the armrest or toward the inside of the armrest pad. Use correct tie-down points for the controller harness to prevent the harness from getting caught in the wheels, pinched in the seat frame, or damaged when passing through doorways.

4. Plug the controller harness into the connector on the power base. **See figure 3 or 4.**

Identification Key

1. Wire Ties
2. Seat
3. Controller
4. Power Base

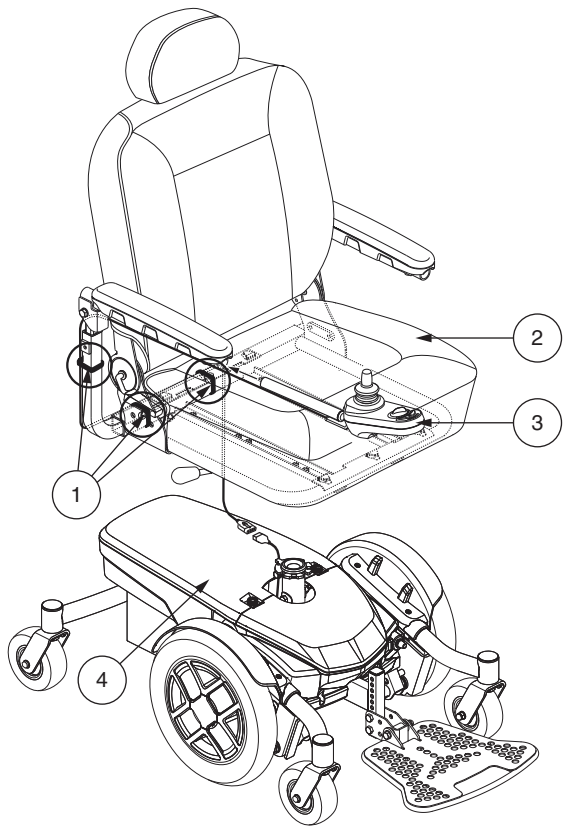

Figure 7. Seat and Controller Assembly

COMFORT ADJUSTMENTS

After becoming familiar with your power chair's operation, you may find the need to make some adjustments to increase your comfort, such as seat height, armrest angle, foot platform height and angle, and controller position. Refer to the following information before making comfort adjustments.

NOTE: If your power chair is equipped with an optional seating system, please refer to the information provided in separate manuals.

WARNING! The center of gravity of your power chair was factory set to a position that meets the needs of the demographic majority of users. Your authorized Pride Provider has evaluated your power chair and made any necessary adjustments to suit your specific requirements. Do not change your seating configuration without first contacting Pride Mobility Products or your authorized Pride Provider.

WARNING! Some power chair components are heavy. You may need assistance to lift or carry them. Please refer to the specifications table for specific component weights before you disassemble the power chair.

WARNING! Remove the occupant from the power chair before making any adjustments.

Seat Height Adjustment

You can change the seat height to one of three positions in 1-in. (2.5-cm) increments.

To change the seat height:

1. Turn off the power to the controller.
2. Ensure the power chair is in drive mode. **See figure 5.**
3. Disconnect the controller connector from the power base. **See figure 8.**
4. Disengage the seat release lever. **See figure 8.**
5. While holding the lever, swivel the seat left or right and then pull it up and off of the power base.
6. Loosen the hardware at the rear of the seat post. **See figure 8.**
7. Remove the seat height adjustment bolt, washers, and nut from the seat post. **See figure 8.**
8. Raise or lower the seat post to the desired position.
9. Reinstall the seat height adjustment hardware to the seat post.
10. Tighten the hardware at the rear of the seat post.
11. Reinstall the seat.
12. Reconnect the controller to the power base.

NOTE: To rotate the seat, use the seat release lever located under the seat.

Identification Key

1. Seat
2. Seat Post
3. Seat Height Adjustment Bolt
4. Controller Connector
5. Seat Release Lever

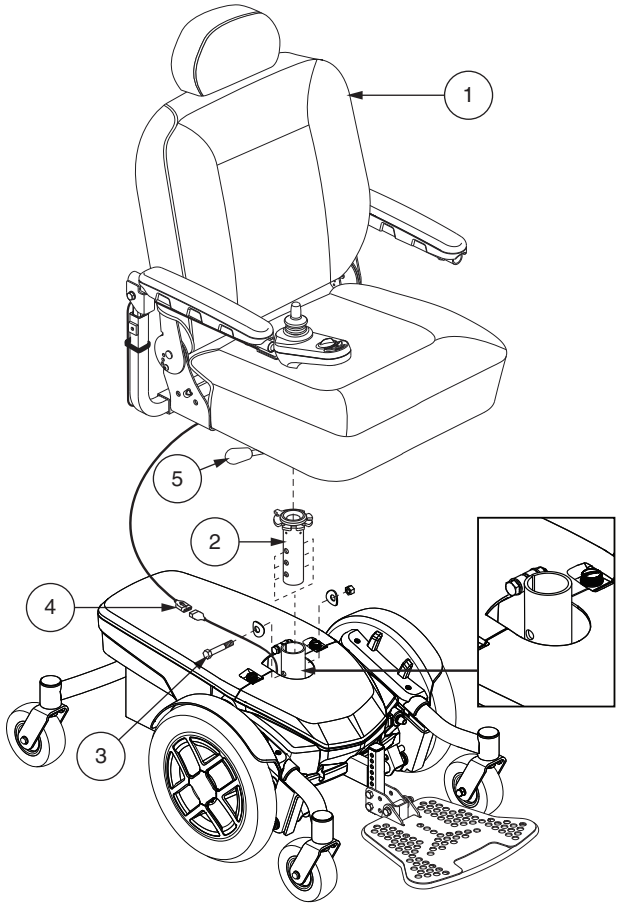

Figure 8. Seat Height Adjustment

V. COMFORT ADJUSTMENTS

NOTE: The most common configuration of the seat adjustment hardware is shown in figure 9. Your product may be equipped with a different configuration. All configurations operate in a similar manner.

Manual Recline Seatback Adjustment

If your power chair is equipped with a manual recline seatback, you can adjust the seatback angle with the seatback release lever. The lever is located on the right side of the seat base. **See figure 1.**

To adjust the recline angle:

1. Pull up on the seatback release lever.
2. Lean forward or backward to the desired position.
3. Release the lever.

Seatback Angle Adjustment

If your power chair is equipped with a limited-recline seatback, you can adjust the seatback up to a 115° angle.

To adjust the seatback angle:

1. Remove the adjusting screws from each seat hinge. **See figure 9.**
2. Set the seatback at the desired angle.
3. Reinstall the adjusting screws to each seat hinge and tighten.

Identification Key

1. Jam Nut
2. Armrest Angle Adjusting Screw
3. Armrest Height Adjusting Setscrews
4. Seatback Angle Adjusting Screw
5. Armrest Knob
6. Setscrew
7. Controller Bracket Receiver

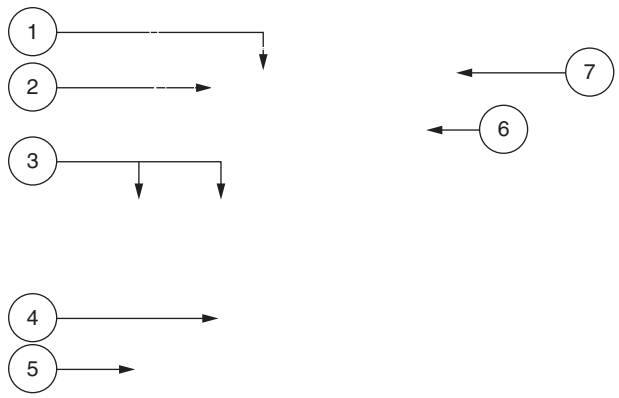

Figure 9. Armrest and Seatback Adjustments

Armrest Width Adjustment

You can change each armrest's width independently of the other.

NOTE: Changing the armrest width may increase the overall width of your power chair.

To change the armrest width:

1. Locate the adjustment hardware on each side of the armrest receiver bracket. **See figure 9.**
2. Loosen the adjustment hardware.
3. Slide the armrests in or out to the desired width.
4. Tighten the adjustment hardware.

Armrest Angle Adjustment

To change the armrest angle:

1. Lift the armrest straight up so that it is perpendicular to the floor.
2. Loosen the jam nut. **See figure 9.**
3. Turn the adjusting screw to raise or lower the front of the armrest.
4. Tighten the jam nut to lock the adjusting screw into place.

V. COMFORT ADJUSTMENTS

Armrest Height Adjustment

To change the armrest height:

1. Loosen the setscrews on the armrest. **See figure 9.**
2. Raise or lower the armrest to the desired height.
3. Tighten the setscrews to secure the armrest.

Controller Position

You can move the controller in toward or out away from the armrest, or change the position of the controller for either left-hand or right-hand use.

WARNING! Do not place the controller harness so that it can be pinched in the seat frame or the power base frame.

To extend the controller:

1. Turn off the power to the controller.
2. Flip up the armrest so it is perpendicular to the floor.
3. Loosen the setscrew on the controller bracket. **See figure 9.**
4. Slide the controller into or out of the armrest to the desired position.
5. Tighten the setscrew to secure the controller.

To change the controller position:

1. Turn off the power to the controller.
2. Unplug the controller harness from the power base.
3. Cut the wire tie(s) that secure the controller harness to the armrest and seat.
4. Flip up the armrests.
5. Loosen the setscrew on the underside of each armrest. **See figure 9.**
6. Slide the controller out of the armrest.
7. Place the controller into the other armrest.
8. Tighten the setscrew to secure the controller.
9. Route the controller harness along the seat frame and secure with wire ties. **See figure 7.**
10. Plug the controller into the power base. **See figure 3 or 4.**

Foot Platform Height Adjustment

The foot platform height is easily adjusted to different heights in 0.5-in. (1.27-cm) increments.

To raise or lower the foot platform:

1. Remove the hardware from the foot platform bracket. **See figure 10 or 11.**
2. Raise or lower the foot platform to the desired height.
3. Reinstall the hardware into the foot platform bracket and tighten.

Foot Platform Depth Adjustment

To adjust the foot platform depth:

1. Remove the hardware from the foot platform bracket. **See figure 10.**
2. Move the foot platform in or out to the desired depth.
3. Reinstall the hardware into the foot platform bracket and tighten.

Foot Platform Angle Adjustment

You can adjust the angle of the foot platform. **See figure 10.**

To adjust the foot platform angle:

1. Flip up the foot platform and locate the adjustment screw.
2. Turn the adjustment screw to raise or lower the front of the foot platform.

Identification Key

1. Foot Platform Bracket
2. Hardware
3. Adjustment Screw

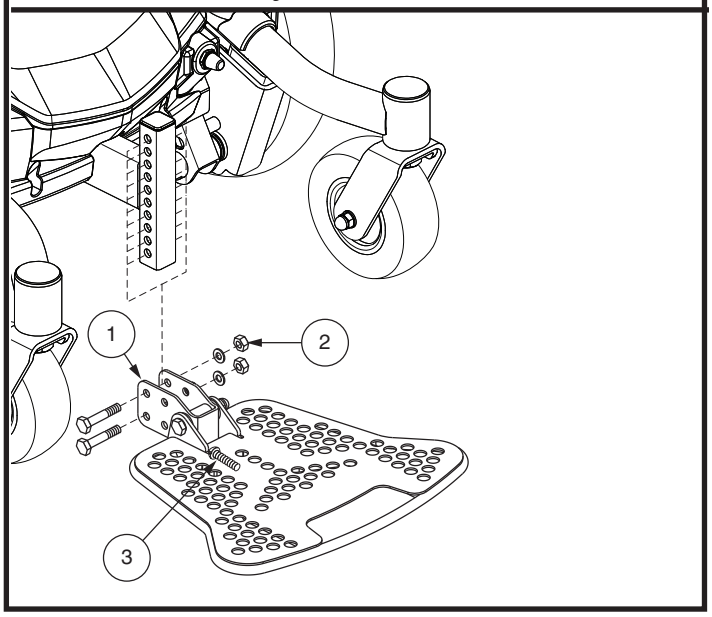

Figure 10. Foot Platform Adjustment

Swing-away Footrests

Swing-away Footrests (SFRs) enable you to rotate the footrests to the side before you transfer onto or off of your power chair. **See figure 11.**

To rotate the SFRs:

1. Push in the release lever.
2. Rotate the SFRs.

To adjust the SFR length:

1. Remove the adjustment screws from the footrest extension.
2. Slide the footrest up or down to the desired length.
3. Reinstall the two adjustment screws.

Elevating Leg Rests

Elevating Leg Rests (ELRs) offer an infinite range of adjustment for the leg angle and a footrest adjustment range of 12-19 in. (30.48-48.26 cm). **See figure 12.**

To rotate the ELRs:

1. Push in release lever A.
2. Rotate the ELRs.

To adjust the ELR angle:

1. Push down release lever B.
2. Move the leg rest to the desired angle.

To adjust the ELR length:

1. Remove the two adjustment screws from the side of each leg rest extension.
2. Slide the leg rest up or down to the desired length.
3. Reinstall the two adjustment screws.

Identification Key

1. SFR Release Lever
2. Adjustment Screws
3. Footrest Extension

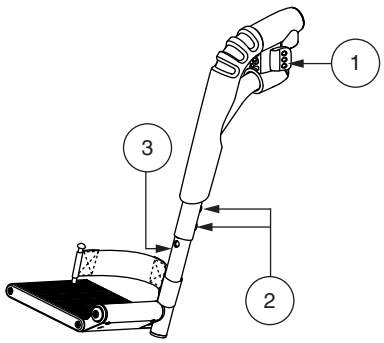

Figure 11. Swing-Away Footrests

Identification Key

1. Release Lever A
2. Release Lever B
3. Adjustment Screws
4. Leg Rest Extension

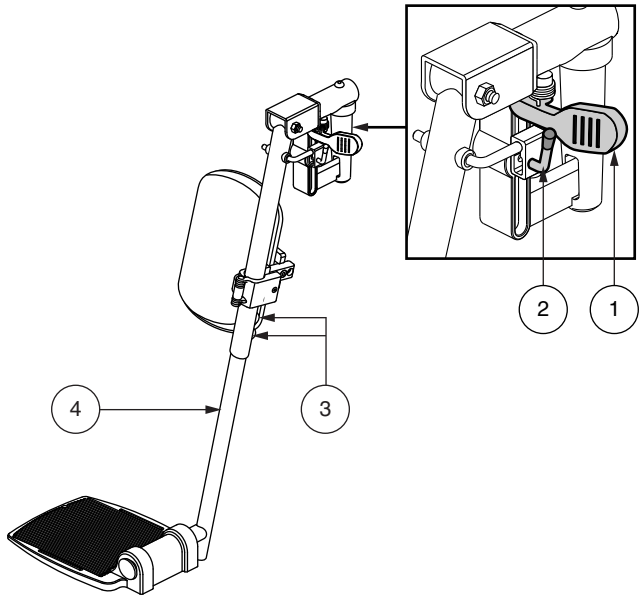

Figure 12. Elevating Leg Rests

Positioning Belt

Your power chair may be equipped with a positioning belt that can be adjusted for operator comfort. **See figure 18.** The positioning belt is designed to support the operator so that he/she does not slide down or forward in the seat. The positioning belt is not designed for use as a restraining device.

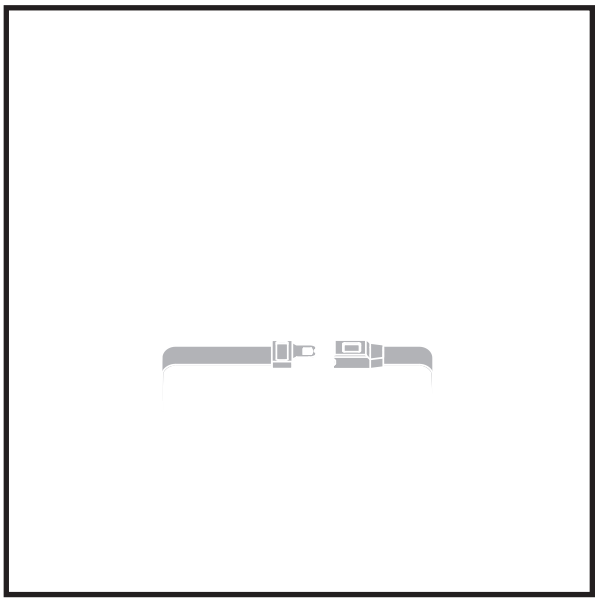

Figure 13. Positioning Belt Adjustment

WARNING! The positioning belt is not designed for use as a seat belt in a motor vehicle. Anyone traveling in a vehicle should be properly belted into seats approved by the vehicle manufacturer. Your power chair is not suitable for use as a seat in any vehicle with the following exception: The vehicle must be equipped with a Wheelchair Tie-down and Occupant Restraint System (WTORS) that has been installed in accordance with the tie-down manufacturer's instructions, and is compliant with ANSI/RESNA WC/Vol. 4, Section 18/ISO 10542 standards, and the power chair must have a transit securement system conforming to ANSI/RESNA WC/Vol. 4, Section 19/ISO 7176-19 standards. It is essential to use a complete WTORS to secure the power chair to the vehicle and to provide the power chair occupant with a properly designed and tested safety restraint system. A restraint system with both pelvic and upper-torso belts must be used to protect the power chair occupant and minimize the likelihood of injury caused by contact with the vehicle during a crash or sudden braking.

WARNING! The positioning belt should be secured at all times. Never allow the positioning belt to hang or drag on the floor as it may become entangled.

To install the positioning belt:

1. Remove the rearmost screw that holds the seat hinge to the seat base on both the left and right seat hinges.
2. Insert the screw through the supplied washer, through the positioning belt, and into the seat base for each side of the power chair seat.
3. Tighten both screws.

To adjust the positioning belt for operator comfort:

1. Once seated, insert the metal tab on one side of the belt into the plastic housing on the opposite side until you hear a click. **See figure 13.**
2. Pull the excess strap attached to the metal tab until it is secure, but not so tight as to cause discomfort.

To release the positioning belt:

1. Press the push button mechanism on the plastic housing.

MANDATORY! Make sure the positioning belt is properly secured to the power chair and is adjusted for operator comfort before each use.

MANDATORY! Inspect the positioning belt for loose parts or damage, including tears, worn spots, bent hardware, damaged latch mechanisms, dirt or debris, before each use of the power chair. If you discover a problem, contact your authorized Pride Provider for maintenance and repair.

VI. BATTERIES AND CHARGING

BATTERIES AND CHARGING - SEALED LEAD ACID (SLA) (AGM/GEL-CELL)

NOTE: For lithium battery information, please refer to the next section, "Batteries and Charging - Lithium."

Your power chair uses two long-lasting, 12-volt, deep-cycle batteries. These batteries are sealed and maintenance free. Since they are sealed, there is no need to check the electrolyte (fluid) level. Deep-cycle batteries are designed to handle a longer and deeper discharge. Though they are similar in appearance to automotive batteries, they are not interchangeable. Automotive batteries are not designed to handle a long, deep discharge, and also are unsafe for use in power chairs.

MANDATORY! Battery posts, terminals, and related accessories contain lead and lead compounds. Wear goggles and gloves when handling batteries and wash hands after handling.

PROHIBITED! Always use two batteries of the exact same type, chemistry, and amp-hour (Ah) capacity. Refer to the specifications table in this manual and in the manual supplied with the battery charger for recommended type and capacities.

WARNING! Contact your authorized Pride Provider if you have any questions regarding the batteries in your power chair.

Charging the Batteries

The battery charger is essential in providing long life for your power chair batteries. It is designed to optimize your power chair's performance by charging the batteries safely, quickly, and easily. The battery charger is only functional when the charger power cord is plugged into an electrical outlet.

PROHIBITED! Removal of grounding prong can create electrical hazard. If necessary, properly install an approved 3-pronged adapter to an electrical outlet having 2-pronged plug access.

PROHIBITED! Never use an extension cord to plug in your battery charger. Plug the charger directly into a properly wired standard electrical outlet.

PROHIBITED! Do not allow unsupervised children to play near the power chair while the batteries are charging. Pride recommends that you do not charge the batteries while the power chair is occupied.

MANDATORY! Read the battery charging instructions in this manual and in the manual supplied with the battery charger before charging the batteries.

WARNING! Explosive gases may be generated while charging the batteries. Keep the power chair and battery charger away from sources of ignition such as flames or sparks and provide adequate ventilation when charging the batteries.

WARNING! You must recharge your power chair's batteries with the supplied off-board battery charger. Do not use an automotive-type battery charger.

WARNING! Inspect the battery charger, wiring, and connectors for damage before each use. Contact your authorized Pride Provider if damage is found.

WARNING! Do not attempt to open the battery charger case. If the battery charger does not appear to be working correctly, contact your authorized Pride Provider.

WARNING! Be aware that the battery charger case may become hot during charging. Avoid skin contact and do not place on surfaces that may be affected by heat.

WARNING! If the battery charger is equipped with cooling slots, then do not attempt to insert objects through these slots.

WARNING! Do not attempt to operate your power chair with depleted batteries, as you may become stranded.

WARNING! If your battery charger has not been tested and approved for outdoor use, then do not expose it to adverse or extreme weather conditions. If the battery charger is exposed to adverse or extreme weather conditions, then it must be allowed to adjust to the difference in environmental conditions before use indoors. Refer to the manual supplied with the battery charger for more information.

WARNING! Do not use a converter with your battery charger. Plug the charger directly into a properly rated electrical outlet. Failure to follow these instructions may result in damage to the charger or converter.

To charge the batteries using the off-board charger:

1. Position the front of your power chair next to a standard electrical outlet.
2. Be certain the controller power is turned off and the freewheel levers are in the engaged position. See III. "Your Power Chair."
3. Plug the off-board charger into the off-board charger/programming socket on the controller. **See figure 14.**
4. Plug the off-board charger into the electrical outlet.

WARNING! The LED lights on the charger indicate different charger conditions at various times: charger power on, charging in progress, and charging complete. If the LED does not indicate that charging is complete within 24 hours, unplug the charger and contact your authorized Pride Provider. Refer to the manual supplied with the charger for a complete explanation of these indicators.

5. When the batteries are fully charged, unplug the off-board charger from the electrical outlet and then from the controller.

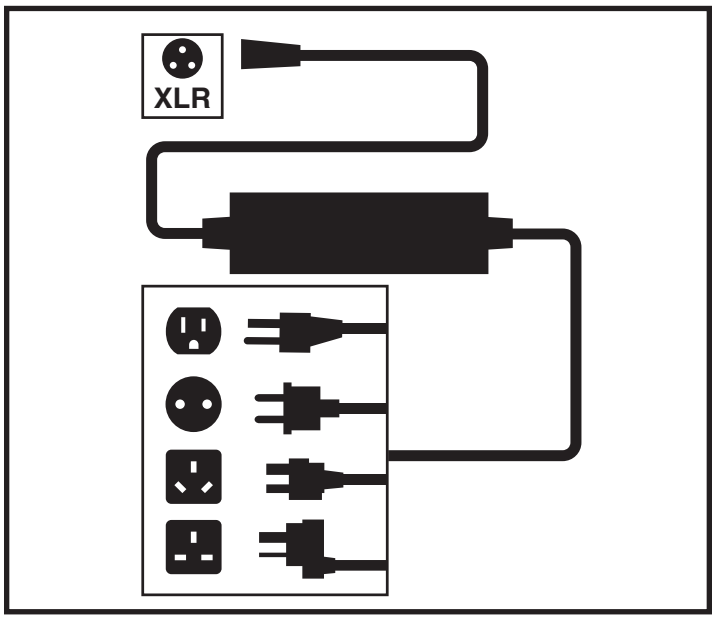

Figure 14. Battery Charging

Battery Break-in

To break in new batteries for maximum efficiency:

1. Fully recharge any new battery prior to its initial use. This brings the battery up to about 90% of its peak performance level.
2. Operate your power chair throughout the house and yard. Move slowly at first, and do not travel too far until you become accustomed to the controls and break in the batteries.
3. Give the batteries another full charge of at least 8 to 14 hours and operate your power chair again. The batteries will now perform at over 90% of their potential.
4. After four or five charging cycles, the batteries will top off at 100% charge and last for an extended period.

Frequently Asked Questions (FAQs)

How does the charger work?
The battery charger takes the standard electrical outlet voltage (alternating current) and converts it to 24V DC (direct current). The power chair batteries use direct current to run your power chair. When the battery voltage is low, the charger works harder to charge the battery. As the battery voltage approaches full charge, the charger doesn't work as hard to complete the charging cycle. When the battery is fully charged, the amperage from the charger is nearly at zero. This is how the charger maintains a charge but does not overcharge the battery.

Can I use a different battery charger?
You should use the charger supplied with the power chair. It is the safest, most efficient tool to charge the batteries. We do not recommend using other types of chargers (e.g., an automotive battery charger).

NOTE: Your power chair's charger will not operate after the batteries have been discharged below 18 volts. If this happens, call your authorized Pride Provider for assistance.

How often must I charge the batteries?
Many factors come into play when deciding how often to charge the batteries. You may use your power chair all day on a daily basis or you may not use it for weeks at a time.

- **Daily Use**
  If you use your power chair on a daily basis, charge the batteries as soon as you are finished using your power chair. Your power chair will be ready each morning to give you a full day's service. It is recommended that you charge the batteries 8 to 14 hours after daily use. Pride recommends that you charge the batteries for an additional 4 hours after the battery charger indicates that charging is complete.

- **Infrequent Use**
  If you use your power chair infrequently (once a week or less), you should charge the batteries at least once per week for at least 24 hours.

NOTE: Your power chair may be equipped with a battery charge reminder feature. If your power chair is driven for 8 hours or more, powered off and not charged, then the charge reminder feature becomes activated when the power chair is powered back on.The charge reminder is displayed when the power chair is powered off again. The left red LED on the battery condition meter will flash 4 times in 0.5-second intervals. This will happen every time the power chair is powered off until the charge reminder is reset by charging the batteries. In order to reset the charge reminder feature once it has been activated, it is important to note that the controller must be powered on prior to attaching the charger to the charger port and must remain on throughout one full charging cycle.

NOTE: Keep your batteries fully charged and avoid deeply discharging your batteries. Refer to the manual supplied with the battery charger for charging instructions. Pride recommends charging your batteries for at least 48 continuous hours once per month to improve battery performance and battery life.

VI. BATTERIES AND CHARGING

How can I get maximum range or distance per charge?
Rarely do you have an ideal driving situation such as smooth, flat, hard terrain with no wind, hills, or curves. More often you are presented with hills, sidewalk cracks, uneven and loosely packed surfaces, curves, and wind. All of these factors will affect the distance or running time per battery charge. Below are a few suggestions for obtaining the maximum range per charge:

- Always charge the batteries fully prior to your trip.
- Plan your trip in advance to avoid inclines if possible.
- Limit baggage weight to essential items.
- Try to maintain an even speed and avoid stop-and-go driving.
- We recommend charging your batteries for at least 48 continuous hours once per month to improve battery performance and battery life.

What type of batteries should I use?
We recommend deep-cycle batteries that are sealed and maintenance free. Both AGM and Gel-Cell are deep-cycle batteries that are similar in performance.

WARNING! Corrosive chemicals contained in batteries. Use only AGM or Gel-Cell batteries to reduce the risk of leakage or explosive conditions.

Why do my new batteries seem weak?
Deep-cycle batteries employ a much different chemical technology than that used in car batteries, nickel-cadmium (nicads), or in other common battery types. Deep-cycle batteries are specifically designed to provide power, drain down their charge, and then accept a relatively quick recharge. AGM and Gel-Cell batteries should be charged as often as possible. They do not have a “memory” like nickel-cadmium batteries.

We work closely with our battery manufacturer to provide a battery that best suits your power chair’s specific demands. Fresh batteries arrive regularly at Pride and are promptly shipped with a full charge. During shipping, the batteries encounter temperature extremes that may influence initial performance. Heat robs the charge from the battery, and cold slows the power available and extends the time needed to recharge the battery (just as with a car battery).

It might take a few days for the temperature of the battery to stabilize and adjust to its new ambient temperature. More importantly, it will take a few “charging cycles” (a partial drain — then a full recharge) to establish the critical chemical balance that is essential to the battery’s peak performance and long life. It will be well worth it to take the time to break in your battery properly.

How can I ensure maximum battery life?
A fully charged deep-cycle battery will provide reliable performance and extended battery life. Keep your power chair’s batteries fully charged whenever possible. Batteries that are regularly and deeply discharged, infrequently charged, or stored without a full charge may be permanently damaged, causing unreliable power chair operation and limited battery life.

NOTE: The useful life of a battery is quite often a reflection of the care it receives.

How should I store my power chair and its batteries?
If you do not use your power chair regularly, we recommend maintaining battery vitality by charging the batteries at least once per week.

VI. BATTERIES AND CHARGING

If you do not plan on using your power chair for an extended period, fully charge the batteries prior to storage. Disconnect the battery harnesses and store the power chair in a warm, dry environment. Avoid temperature extremes, such as freezing and excessively hot conditions, and never attempt to charge a frozen battery. A cold or frozen battery should be warmed for several days prior to recharging.

What about public transportation?
AGM and Gel-Cell batteries are designed for application in power chairs and other mobility vehicles. These batteries are Federal Aviation Administration (FAA) approved, allowing safe transportation on aircraft, buses, and trains, as there is no danger of spillage or leakage. We suggest you contact the carrier's ticket counter in advance to determine that carrier's specific requirements.

What about shipping?
If you wish to use a freight company to ship your power chair to your final destination, repack your power chair in the original shipping container, if possible, and ship the batteries in separate boxes.

BATTERIES AND CHARGING - LITHIUM

Your power chair requires one lithium battery that is sealed and maintenance-free. It is recharged by the supplied off-board charging system.

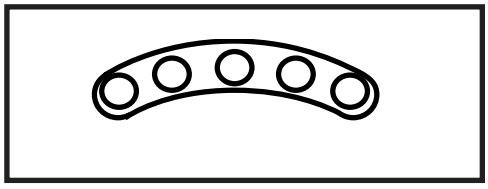

Figure 15. Battery Condition Meter

- **Charge your power chair's battery prior to using it for the first time. For optimal performance, fully charge your power chair's battery using the charger supplied with the power chair. Plug the charger into your power chair first and then plug the charger into electrical outlet.**
- Keep the battery fully charged to keep your power chair running smoothly.

Reading your Battery Voltage

The battery condition meter on the tiller console or controller indicates the approximate strength of your battery using a color code. From right to left on the meter, green indicates fully charged batteries, yellow a draining charge, and red indicates that an immediate recharge is necessary. **See figure 15.** To ensure the highest accuracy, the battery condition meter should be checked while operating your power chair at full speed on a dry, level surface.

Charging the Battery

The battery charger is essential in providing long life for your power chair battery. It is designed to optimize your power chair's performance by charging the battery safely, quickly, and easily. The battery charger is only functional when the charger power cord is plugged into an electrical outlet.

PROHIBITED! Removal of grounding prong can create electrical hazard. If necessary, properly install an approved 3-pronged adapter to an electrical outlet having 2-pronged plug access.

PROHIBITED! Never use an extension cord to plug in your battery charger. Plug the charger directly into a properly wired standard electrical outlet.

PROHIBITED! Do not allow unsupervised children to play near the power chair while the battery is charging. Pride recommends that you do not charge the battery while the power chair is occupied.

MANDATORY! Read the battery charging instructions in this manual and in the manual supplied with the battery charger before charging the battery.

VI. BATTERIES AND CHARGING

WARNING! Explosive gases may be generated while charging the battery. Keep the power chair and battery charger away from sources of ignition such as flames or sparks and provide adequate ventilation when charging the battery.

WARNING! You must recharge your power chair's battery with the supplied off-board charger. Do not use an automotive-type battery charger.

WARNING! Inspect the battery charger, wiring, and connectors for damage before each use. Contact your authorized Pride Provider if damage is found.

WARNING! Do not attempt to open the battery charger case. If the battery charger does not appear to be working correctly, contact your authorized Pride Provider.

WARNING! If the battery charger is equipped with cooling slots, then do not attempt to insert objects through these slots.

WARNING! Be aware that the battery charger case may become hot during charging. Avoid skin contact and do not place on surfaces that may be affected by the heat.

WARNING! Do not attempt to operate your power chair with depleted batteries, as you may become stranded.

WARNING! Battery chargers are not suitable to be used by children.

WARNING! If your battery charger has not been tested and approved for outdoor use, then do not expose it to adverse or extreme weather conditions. If the battery charger is exposed to adverse or extreme weather conditions, then it must be allowed to adjust to the difference in environmental conditions before use indoors. Refer to the manual supplied with the battery charger for more information.

Follow the 6 easy steps in figure 16 to charge your battery/batteries safely:

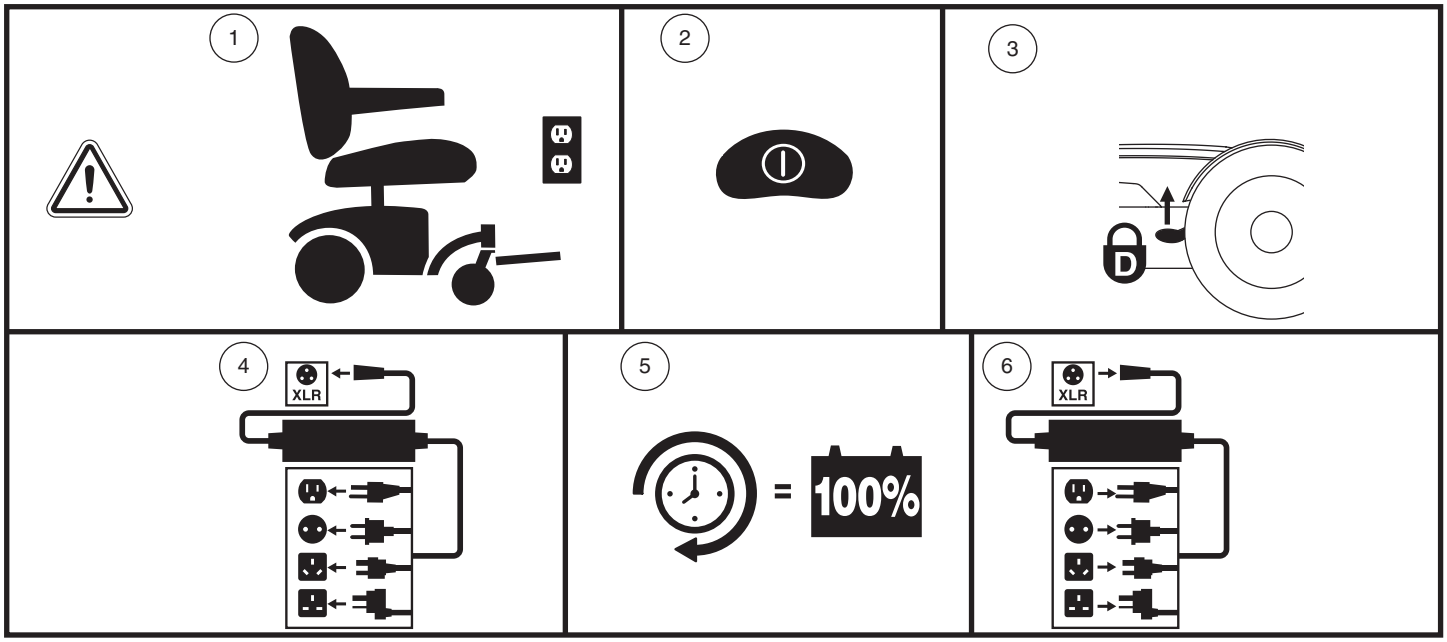

Figure 16. Battery Charging Procedures Diagram

WARNING! Do not touch hot surface. Persons who have sensitivity challenges must take additional precautions to prevent touching hot surfaces of the charger.

WARNING! The battery charger may have indicator lights that illuminate under certain conditions. Refer to the operating instructions supplied with the charger for a complete explanation of these indicators.

NOTE: There is a charger inhibit function on your power chair. The power chair will not run and the battery condition meter will not operate while the battery are charging (when the battery pack is being charged on the power chair).

FREQUENTLY ASKED QUESTIONS

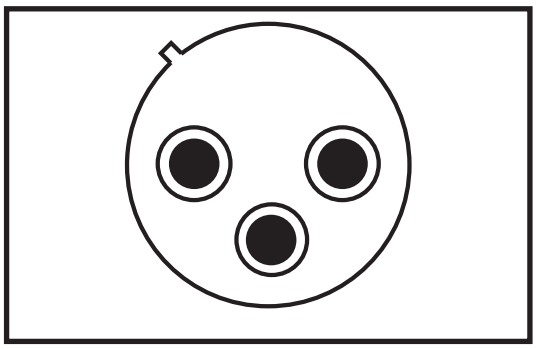

Figure 17. 3-pin Off-Board Charging Socket

How does the charger work?
Refer to the manual supplied with the battery charger for charging instructions.

Can I use a different charger?
No. Any charging method using any other charger than the one supplied with your power chair is especially prohibited.

What if my power chair's battery will not charge?
- Ensure that the fuse on the battery is in working condition.
- Ensure both ends of the charger power cord are inserted fully.
- Ensure the charge LED, located on the charger, is operating as indicated in the charger manual.

How often must I charge the battery?
Two major factors must be considered when deciding how often to charge your power chair's battery:
- All day use on a daily basis.
- Infrequent or sporadic use.

With these considerations in mind, you can determine how often and for how long you should charge your power chair's batteries. You may encounter some problems if you do not charge your battery often enough and if you do not charge it on a regular basis. Following the guidelines below will provide safe and reliable battery operation and charging.
- If you use your power chair daily, charge its battery as soon as you finish using it for the day.
- If you use your power chair once a week or less, charge its battery at least once a week.
- Never store your power chair with a fully discharged battery.

NOTE: Your power chair's battery should only be charged at room temperature. Avoid charging the battery in extreme temperature environments such as hot cars, windowsills, hot or cold garages. Avoid heat-generating environments. Refer to the manual supplied with the battery charger for charging instructions.

How can I ensure maximum battery life?
Lithium batteries perform best with short or interval charging and partial discharges. Protect your power chair and battery from extreme heat or cold. Batteries that are regularly and deeply discharged, infrequently charged, stored in extreme temperatures, or stored without a full charge may be permanently damaged, causing unreliable performance and limited service life. The following are temperature suggestions for operation, storage, and charging of your lithium battery.

Recommended operational temperature range:
- -4°F/-20°C to 122°F/50°C (optimal range is 59°F/15°C to 77°F/25°C)

Recommended storage temperature range:
- 23°F/-5°C to 77°F/25°C (optimal range is 59°F/15°C to 77°F/25°C)

Recommended charging temperature range:
- 32°F/0°C to 104°F/40°C (optimal temperature is 68°F/20°C)

VI. BATTERIES AND CHARGING

NOTE: To extend battery life, always turn off the power chair and remove the key when not in use.

How can I get maximum range or distance per charge?
Rarely will you have ideal driving conditions—smooth, flat, hard driving surfaces with no wind or curves. Often, you will face hills, sidewalk cracks, uneven and loosely packed surfaces, curves, and wind, all of which affect the distance or running time per battery charge. Below are a few suggestions for obtaining the maximum range per battery charge.

- Lithium batteries perform best with short or interval charging and partial discharges.
- Plan your route ahead to avoid as many hills, cracked, broken, or soft surfaces as possible.
- Limit your baggage weight to essential items.
- Try to maintain an even speed while your power chair is in motion.
- Avoid stop-and-go driving.
- If storing your battery for more than thirty (30) days, we recommend charging your battery once per month to improve battery performance and battery life. Follow the charging instruction as recommended in the manual supplied with the battery charger.
- Make sure all harness connections are secured properly.
- Operating your power chair at a reduced speed will improve range.

What type and size of battery should I use?
Your power chair requires one lithium battery box. Refer to the product specification insert supplied with your owner's manual in the owner's package for more information.

WARNING! Corrosive chemicals are contained in batteries. Replace an original lithium battery box with an approved replacement lithium battery box to reduce the risk of leakage or explosive conditions.

NOTE: Sealed battery boxes are not serviceable.

Why do my new batteries seem weak?
Lithium batteries employ a different chemical technology than that used in car batteries, nickel-cadmium batteries (nicads), and other common battery types. Lithium batteries are specifically designed to provide power, drain down their charge, and then accept a relatively quick recharge.

We work closely with our battery manufacturer to provide batteries that best suit your power chair's specific electrical demands. During shipping, the batteries may encounter temperature extremes that can influence their initial performance. Heat diminishes the charge on the battery; cold slows the available power and extends the time needed to recharge the battery.

It may take a few days for the temperature of your power chair's battery to stabilize and adjust to their new room or ambient temperature. More importantly, it takes a few charging cycles (partial draining followed by full recharging) to establish the critical chemical balance that is essential to a lithium battery's peak performance and long life.

Follow these steps to properly break in your power chair's new battery for maximum efficiency and service life.
1. Lithium batteries perform best with short or interval charging and partial discharges.
2. Operate your new power chair in familiar and safe areas. Drive slowly at first, and do not travel too far from your home or familiar surroundings until you have become accustomed to your power chair's controls, then fully recharge the battery.
3. After four or five charging cycles, the battery is able to receive a charge of 100% of peak performance level and are able to last for an extended period of time.

What about public transportation?
Lithium batteries are designed for application in power chairs and other mobility vehicles. These batteries meet Federal Aviation Administration (FAA) requirements (United States only), allowing safe transportation on aircraft, buses, and trains, as there is no danger of spillage or leakage. Transport of the item on commercial aircraft is subject to federal regulations and airline policy. We suggest you contact the carrier's ticket counter in advance to determine that carrier's specific requirements, and to ensure your producto de movilidad and its battery are permitted.

What about air travel?
Lithium batteries are made in a variety of sizes and ratings for different uses. Not all lithium batteries are rated for air travel. Your power chair is labeled to indicate if the batteries are tested and comply with United Nations Transport Regulation standard UN38.3. Refer to the battery box of your power chair to determine if the battery is rated for air travel.

Indicates that the battery in your power chair has been tested and complies with United Nations Transport Regulations standard UN38.3. We suggest you contact the carrier's ticket counter in advance to determine that carrier's specific requirements, and to ensure your power chair and its battery are permitted.

Indicates that the battery in your power chair does NOT comply with United Nations Transport Regulations standard UN38.3.

How do I change a battery in my power chair?

MANDATORY! The battery box and battery within it may contain heavy metals that may be toxic. Wear goggles and gloves when handling the battery box and wash hands after handling.

WARNING! Always ensure that the replacement battery box contains a battery of the same specifications and rating of the one being replaced.

WARNING! Contact your authorized Provider/Dealer if you have any questions regarding the battery in your power chair.

WARNING! Do not replace the battery box while the power chair is occupied.

WARNING! The battery box on your power chair should only be replaced by an authorized Provider/Dealer or a qualified technician.

PROHIBITED! Keep tools and other metal objects away from the battery box. Contact with tools can cause electrical shock.

NOTE: Do not open or attempt to disassemble the battery box or attempt to replace the lithium battery within the battery box. Contact your authorized Provider/Dealer for a complete replacement battery box.

WARNING! Do not lift beyond your physical capability. Ask for assistance when necessary while disassembling or assembling your power chair.

WARNING! Do not pull on electrical harness wires directly to detach them from the power chair. Always grasp the connector itself when disconnecting the harness to prevent wire damage.

NOTE: If you encounter a damaged or cracked battery box, immediately enclose it in a plastic bag and contact your local waste disposal agency or authorized Provider/Dealer for instructions on disposal and battery recycling which is our recommended course of action.

CARE AND MAINTENANCE

Your Jazzy is a sophisticated power chair. Like any motorized vehicle, it requires routine maintenance checks. You can perform some of these checks, but others require assistance from your authorized Pride Provider. Preventive maintenance is very important. If you follow the maintenance checks in this section as scheduled, you can help ensure that your power chair gives you years of trouble-free operation. If you have any doubt as to your power chair's care or operation, contact your authorized Pride Provider.

WARNING! Do not service the power chair when the seat is occupied.

Your power chair, like most electrical equipment, is susceptible to damage from the elements. Avoid damp areas of any kind.

WARNING! Direct or prolonged exposure to water or dampness could cause the power chair to malfunction electronically and mechanically. Water can cause electrical components to corrode and the chair's frame to rust. Power chairs should be examined periodically for signs of corrosion caused by water exposure, bodily fluids exposure, or incontinence. Damaged components should be replaced or treated immediately.

Should your power chair come in contact with water:

1. Dry your power chair as thoroughly as possible with a towel.
2. Allow your power chair to sit in a warm, dry place for 12 hours to allow unseen water to evaporate.
3. Check the joystick operation and the brakes before using your power chair again.
4. If any inconsistencies are found, take your power chair to your authorized Pride Provider. Power chairs that are frequently exposed to sources of water, such as incontinence, should be inspected often for corrosion and electronic components may need to be replaced frequently.

Temperature

- Although your power chair can withstand short-term storage temperatures between -40°F (-40°C) to 149°F (65°C), it is recommended that long-term storage temperatures be between -13°F (-25°C) and 122°F (50°C). Ideal storage conditions are 68°F (20°C) to 70°F (21°C) wherever possible, but we realize that is not always feasible due to different climates and environments.
- In extremely cold temperatures the batteries may freeze. The specific temperature at which they freeze depends on a number of factors, such as battery charge, usage, and composition of the batteries (e.g., AGM or Gel-Cell).

General Guidelines

- Avoid knocking or bumping the controller, especially the joystick.
- Avoid prolonged exposure of your power chair to extreme conditions, such as heat, cold, or moisture.
- Keep the controller clean.
- Check all connectors to ensure that they are all tight and secured properly.
- Make sure pneumatic tires are inflated to the psi/bar/kPa air pressure rating indicated on the tire.

WARNING! Make sure your tires are inflated to the psi/bar/kPa air pressure rating indicated on the tire for pneumatic tires. Do not underinflate or overinflate your tires. Low pressure may result in loss of control, and overinflated tires may burst. Overinflating tires can cause them to explode.

WARNING! Do not use a high pressure hose to inflate your tires.

- Use a rubber conditioner on the tire sidewalls to help preserve them.

WARNING! Never use a rubber conditioner on the tread area of the tires; doing so may make the tires slippery and cause your power chair to skid.

VII. CARE AND MAINTENANCE

- All wheel bearings are prelubricated and sealed. They require no subsequent lubrication.
- If your power chair has a body shroud with a **glossy finish**, the body shroud has been sprayed with a clear sealant coating. You can apply a light coat of car wax to help it retain its high-gloss appearance. If your power chair has a body shroud with a **matte finish**, use ONLY products developed for matte-finish paint. Do not use wax, detail spray, ArmorAll®, or any product made for glossy paint.

WARNING! Carefully choose the correct product to protect the finish of your power chair's shroud(s). ONLY products developed for matte-finish paint should be used on shrouds with a matte finish. Failure to follow this warning may result in damage to the shroud's matte paint finish.

- Check all electrical connections. Make sure they are tight and are not corroded. Batteries must sit flat within the battery well frame with the battery terminals facing inward toward each other. Refer to the battery wiring label for the correct wiring layout.

WARNING! Even though the power chair has passed the necessary testing requirements for ingress of liquids, you should keep electrical connections away from sources of dampness, including direct exposure to water or bodily fluids and incontinence. Check electrical components frequently for signs of corrosion and replace as necessary.

Daily Checks

- With the controller turned off, check the joystick. Make sure it is not bent or damaged and that it returns to the neutral position when you release it. Check the rubber boot around the base of the joystick for damage. Visually inspect the boot. Do not handle or try to repair it. See your authorized Pride Provider if there is a problem.
- Visually inspect the controller harness. Make sure that it is not frayed, cut, or has any wires exposed. See your authorized Pride Provider if there is a problem.
- Check for flat spots on solid tires. Flat spots could adversely affect stability.
- Inspect the seating system, armrests, and front riggings for loose hardware, stress points, or damage. See your authorized Pride Provider if there is a problem.

Weekly Checks

- Disconnect and inspect the controller harness and the charger harness from the power base. Look for corrosion. Contact your authorized Pride Provider if necessary.
- Ensure that all parts of the controller system are securely fastened to your power chair. Do not overtighten any screws.
- Check for proper tire inflation. Maintain but do not exceed the psi/bar/kPa air pressure rating indicated on each tire for pneumatic tires. If a tire does not hold air, see an authorized Pride Provider for replacement of the tube.
- Check the brakes. This test should be carried out on a level surface with at least 3 feet (1 meter) of clearance around your power chair.

To check the brakes:

1. Turn on the controller and turn down the speed level of your power chair.
2. After one second, check the battery condition meter. Make sure that it remains on.
3. Slowly push the joystick forward until you hear the electric brakes click. Immediately release the joystick. You must be able to hear each electrical brake operating within a few seconds of joystick movement. Repeat this test three times, pushing the joystick backward, then left, and then right.

VII. CARE AND MAINTENANCE

Monthly Checks

- Check for extreme wear on the anti-tip wheels. Replace them as necessary.
- Check for drive tire wear. See your authorized Pride Provider for repair.
- Check the caster wheels for wear. Replace them as necessary.
- Check the caster forks for damage or fluttering which indicates that they may need to be adjusted or have the bearings replaced. See your authorized Pride Provider for repair.
- Check the entire power chair for loose hardware and changes in the function or performance of the power chair. See your authorized Pride Provider for service or repair.
- Keep your power chair clean and free of foreign material, such as mud, dirt, hair, food, drink, etc.

Yearly Checks

Take your power chair to your authorized Pride Provider for yearly maintenance, especially if you use your power chair on a daily basis. This helps ensure that your power chair is functioning properly and helps prevent future complications.

Storage

Your power chair should be stored in a dry place, free from temperature extremes. When storing, disconnect the batteries from the power chair. See VI. “Batteries and Charging.”

WARNING! If you fail to store the unit properly, the frame can rust and the electronics can be damaged.

Batteries that are regularly and deeply discharged, infrequently charged, stored in extreme temperatures, or stored without a full charge may be permanently damaged, causing unreliable performance and limited service life. It is recommended that you charge the batteries periodically throughout periods of prolonged storage to ensure proper performance.

You may wish to place several boards under the frame of your power chair to raise it off of the ground during periods of prolonged storage. This takes the weight off the tires and reduces the possibility of flat spots developing on the areas of the tires contacting the ground.

Disposal of Your Power Chair

Your power chair must be disposed of according to applicable local and national statutory regulations. Contact your local waste disposal agency or authorized Pride Provider for information on proper disposal of power chair packaging, metal frame components, plastic components, electronics, batteries, neoprene, silicone, and polyurethane materials.

WARNING! Plastic bags are a suffocation hazard. Dispose of plastic bags properly and do not allow children to play with them.

Cleaning and Disinfection

- Use a damp cloth and mild, non-abrasive cleanser to clean the plastic and metal parts of your power chair. Avoid using products that may scratch the surface of your power chair.
- If necessary, clean your product with an approved disinfectant. Make sure the disinfectant is safe for use on your product before application.

WARNING! Follow all safety instructions for the proper use of the disinfectant and/or cleaning agent before applying it to your product. Failure to comply may result in skin irritation or premature deterioration of upholstery and/or power chair finishes.

WARNING! Never hose off your power chair or place it in direct contact with water. Your power chair has a painted, ABS plastic body shroud that allows it to be easily wiped clean with a damp cloth.

WARNING! Never use any chemicals to clean a vinyl seat, as they may cause the seat to become slippery or dry out and crack. Use soapy water and dry the seat thoroughly.

Wheel Replacement

If you have pneumatic tires and you have a flat tire, replace the tube. If your chair is equipped with a solid tire insert, then you must replace the whole wheel assembly. Replacement tires, tubes, and wheel assemblies are readily available through your authorized Pride Provider.

WARNING! The wheels on your power chair should only be serviced or replaced by an authorized Pride Provider or a qualified technician.

WARNING! Be sure that the power to the controller is turned off and the power chair is not in freewheel mode before performing this procedure.

WARNING! When changing a tire, remove only the center lug nut and washer, then remove the wheel. If any further disassembly is required, deflate the tire completely or it may explode.

Follow these easy steps for a quick and safe repair for both pneumatic and solid tires:

1. Turn off the power to the controller.
2. Make sure that the power chair is in drive mode. **See figure 5.**
3. Raise and support the power base so that the wheel is at least 1 in. (2.5 cm) off of the ground.
4. If you are changing a pneumatic tire, completely deflate it before removing the wheel.
5. Remove the cap cover, if equipped.
6. Remove the drive wheel nut and washer from the axle. **See figure 18.**
7. Remove the drive wheel from the axle. Make sure that you keep the key.
8. Slide the wheel back onto the axle. Make sure that the key is in the axle slot.

WARNING! Ensure that the axle key is properly installed into the axle slot when mounting the wheel. If not installed securely, the braking and drive systems are disengaged which may cause personal injury or product damage.

Identification Key

1. Motor
2. Key
3. Axle
4. Drive Wheel
5. Drive Wheel Nut
6. Drive Wheel Washer
7. Cap Cover

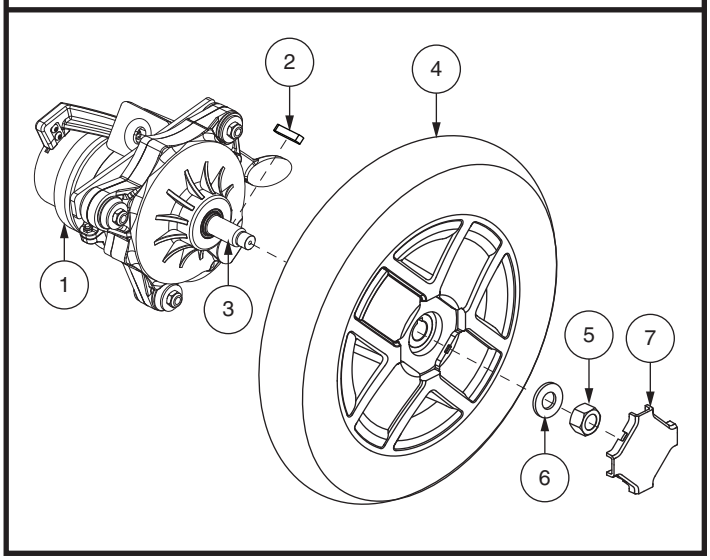

Figure 18. Drive Wheel Removal

9. Reinstall the drive wheel nut and washer onto the axle and tighten. **See figure 16.**

WARNING! Make sure both the nut and washer are reinstalled and tightened properly.

10. Reinstall the cap cover, if equipped.
11. Inflate the pneumatic tire to the psi/bar/kPa air pressure rating indicated on each tire.
12. Remove the power chair from the base support.

Battery Replacement

A battery wiring diagram is printed on a decal located on the power base. See VI. “Batteries and Charging” for correct battery specifications.

MANDATORY! Battery posts, terminals, and related accessories contain lead and lead compounds. Wear goggles and gloves when handling batteries and wash hands after handling.

WARNING! The batteries in your power chair should only be serviced or replaced by an authorized Pride Provider or a qualified technician.

WARNING! Do not replace batteries when seat is occupied.

WARNING! Power chair batteries are heavy. See specifications table. If you are unable to lift that much weight, be sure to get help. Use proper lifting techniques and avoid lifting beyond your capacity.

WARNING! Do not mix old and new batteries. Always replace both batteries at the same time.

PROHIBITED! Keep tools and other metal objects away from the battery terminals. Contact with tools can cause electrical shock.

You may need the following to replace your batteries:

- metric/standard socket set and ratchet
- adjustable wrench

To replace the batteries:

1. Turn off power to the controller.
2. Make sure that the power chair is in drive mode. **See figure 5.**
3. Remove the top shroud. **See figure 19 or 20.**
4. Loosen the thumbscrews and remove the rear shroud.
5. If equipped with two (2) SLA batteries, disconnect the rear battery harness from the power base and remove the battery. Slide the front battery rearward, disconnect the front battery harness from the power base, and remove the front battery. **See figure 19.** If equipped with a lithium battery, disconnect the battery harnesses and remove the battery. **See figure 20.**
6. Remove the battery harnesses from the old battery/batteries and install them onto the new battery/batteries. Make sure that the hardware is facing the correct direction. **See figure 19 or 20.**

WARNING! Make sure you tighten the fasteners so that the connections are secure.

7. For installation of new SLA batteries, place the front battery into the power base. Make sure that the terminals are facing the front of the power base. **See figure 19.** Connect the front battery harness to the power base and slide the front battery forward. Place the rear battery onto the power base. Make sure that the terminals are facing the front of the power base. **See figure 19.** Connect the rear battery harness to the power base.
8. For installation of a new lithium battery, place the battery into the power base. Make sure that the terminals are facing the rear of the power base. **See figure 20.** Connect the rear battery harness to the power base.
9. Reinstall the rear cover.
10. Reinstall the top cover.

NOTE: When installing the rear cover, make sure that the controller and power seat harnesses are routed through the notch in the right side.

11. Charge the batteries. See VI. “Batteries and Charging.”

Identification Key

1. Rear Shroud
2. Top Shroud
3. Front Battery
4. Rear Battery
5. Thumbscrews

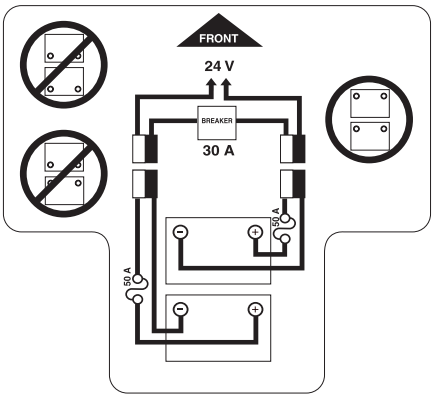

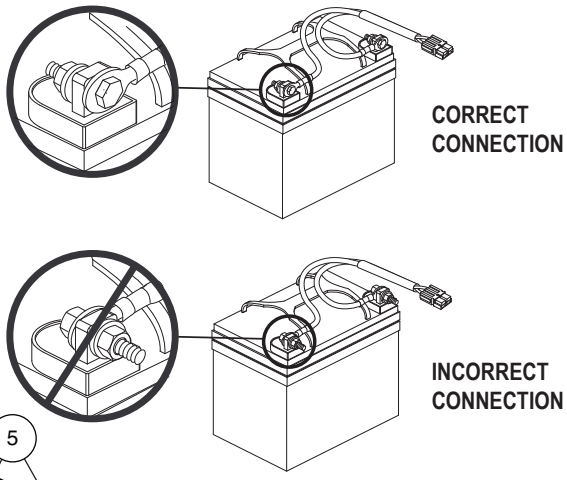

BATTERY SET CONFIGURATION:
+ = POSITIVE (RED) TERMINAL POST
- = NEGATIVE (BLACK) TERMINAL POST
CONNECT RED WIRE TO RED POSITIVE (+) TERMINAL POST.
CONNECT BLACK WIRE TO BLACK NEGATIVE (-) TERMINAL POST.

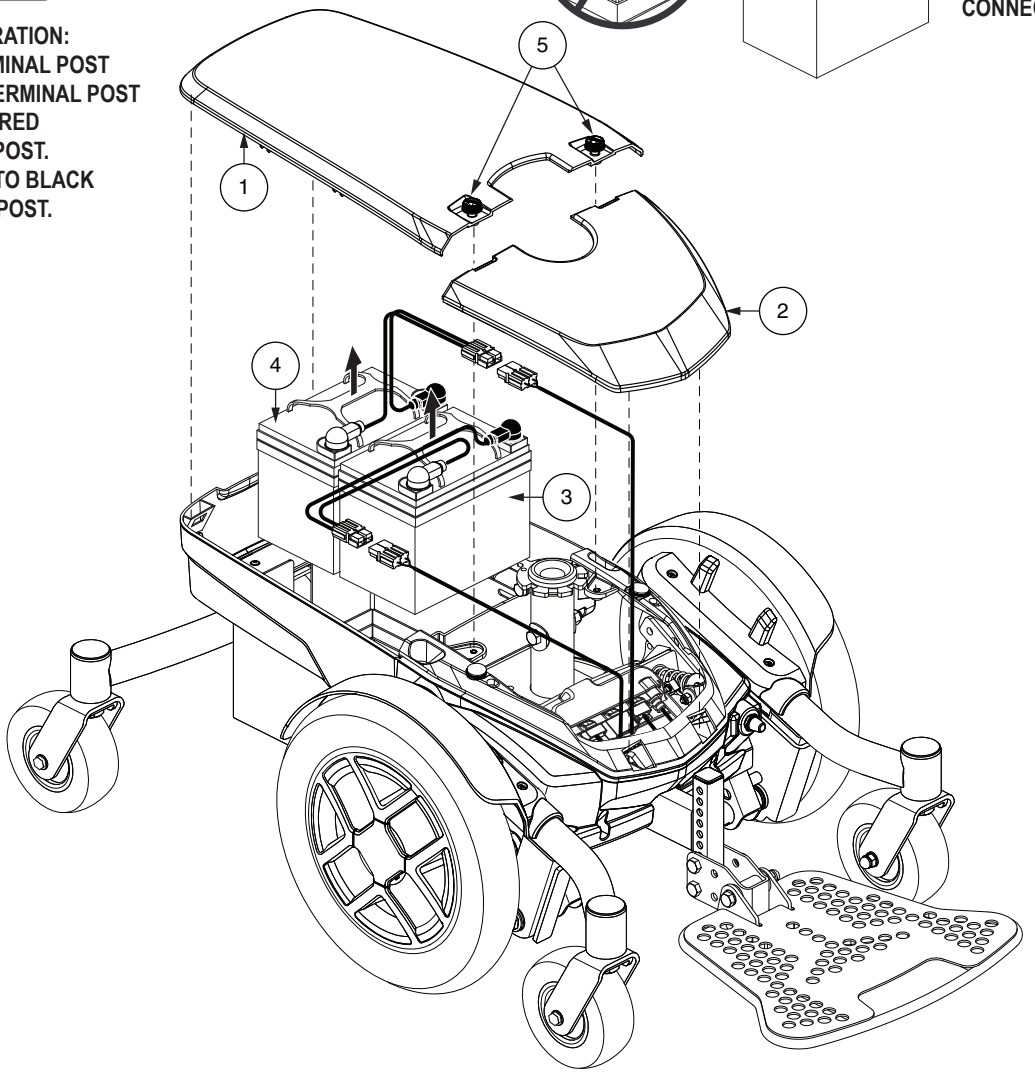

Figure 19. SLA Battery Installation (Seat Removed for Clarity)

Identification Key

1. Rear Shroud
2. Top Shroud
3. Battery
4. Thumbscrews

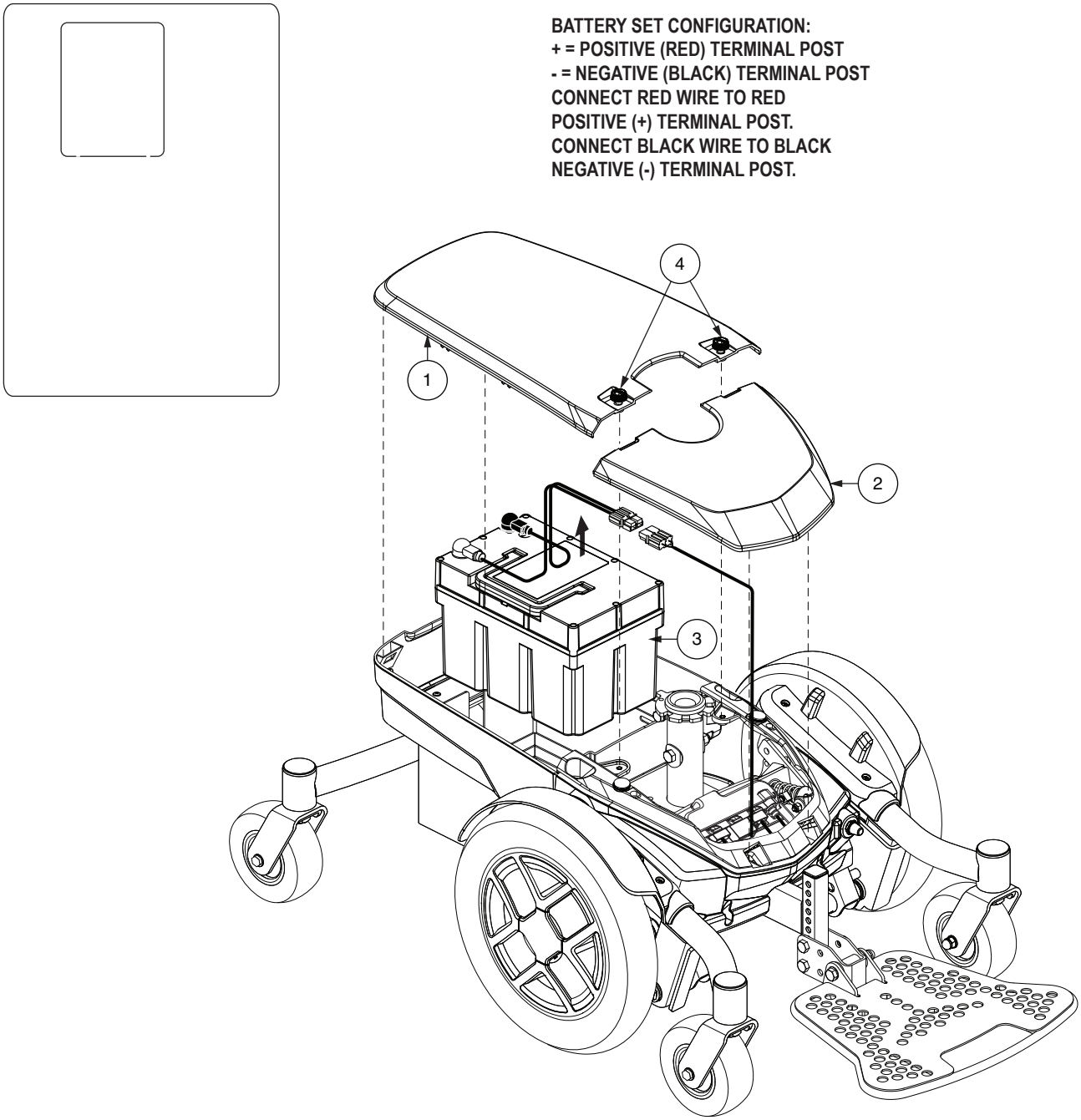

Figure 20. Lithium Battery Installation (Seat Removed for Clarity)

When to See Your Authorized Pride Provider for Service

The following symptoms could indicate a serious problem with your power chair. If necessary, contact your authorized Pride Provider. When calling, have the model number, serial number, nature of the problem, and the error code if available.

- Motor noise
- Frayed harnesses
- Cracked or broken connectors
- Uneven wear on any of the tires
- Jerky motion
- Pulling to one side
- Bent or broken wheel assemblies
- Does not power up
- Powers up, but does not move
- Loose seat or seating components

Corrective Maintenance

If the battery condition meter does not light up when you turn on the power:

- Check the harness connections. Make sure they are tight.
- Check the circuit breaker. Reset it if necessary.
- Check the battery connections.

If the above conditions prove normal and your power chair still does not power up, contact your authorized Pride Provider.

NOTES

NOTES

NOTES

PRIDE®
MOBILITY

USA
401 York Avenue
Duryea, PA 18642
www.pridemobility.com

Canada
5096 South Service Road
Beamsville, Ontario L0R 1B3
www.pridemobility.com

Australia
20-24 Apollo Drive
Hallam, Victoria 3803
www.pridemobility.com.au

New Zealand
38 Lansford Crescent
Avondale, Auckland 0600
www.pridemobility.co.nz

UK
(Authorised UK Representative)
32 Wedgwood Road
Bicester, Oxfordshire OX26 4UL
www.pride-mobility.co.uk

The Netherlands
(Authorised EU Representative)
De Zwaan 3
1601 MS Enkhuizen
www.pride-mobility.nl
www.pridemobility.eu

Italy
Via del Progresso-ang. Via del Lavoro
Loc. Prato della Corte
00065 Fiano Romano (RM)
www.pride-italia.it

France
26 Rue Monseigneur Ancel
69800 Saint-Priest
www.pridemobility.fr

Spain
Calle Las Minas Número 67
Polígono Industrial Urtinsa II, de Alcorcón
28923 Madrid
www.pridemobility.es

Germany
Hövelrieger Str. 28
33161 Hövelhof
www.pridemobility.de

China
Room 508, Building #4, TianNa Business Zone
No. 500 Jianyun Road, Pudong New Area
Shanghai 201318
www.pridechina.cn

Product Serial #

INFMANU5239

UDI Label (if applicable)