MAXIMA

OWNER'S MANUAL

Pride®
Mobility Products Corp.
www.pridemobility.com

1-800-800-8586 (US) 1-888-570-1113 (Canada)

SAFETY GUIDELINES

WARNING! An authorized Pride Provider or qualified technician must perform the initial setup of this scooter and must perform all of the procedures in this manual.

The symbols below are used throughout this owner's manual and on the scooter to identify warnings and important information. It is very important for you to read them and understand them completely.

WARNING! Indicates a potentially hazardous condition/situation. Failure to follow designated procedures can cause either personal injury, component damage, or malfunction. On the product, this icon is represented as a black symbol on a yellow triangle with a black border.

MANDATORY! These actions should be performed as specified. Failure to perform mandatory actions can cause personal injury and/or equipment damage. On the product, this icon is represented as a white symbol on a blue dot with a white border.

PROHIBITED! These actions are prohibited. These actions should not be performed at any time or in any circumstances. Performing a prohibited action can cause personal injury and/or equipment damage. On the product, this icon is represented as a black symbol with a red circle and red slash.

Please fill out the following information for quick reference:

Pride Provider: _____

Address: _____

Phone Number: _____

Purchase Date:_____ **Serial Number:**_____

NOTE: This owner's manual is compiled from the latest specifications and product information available at the time of publication. We reserve the right to make changes as they become necessary. Any changes to our products may cause slight variations between the illustrations and explanations in this manual and the product you have purchased. The latest/current version of this manual is available on our website.

ACN 088 609 661

Copyright © 2010
Pride Mobility Products Corp.
INFMANU2058/Rev G/November 2010

CONTENTS

I. INTRODUCTION 4

II. SAFETY 5

III. YOUR SCOOTER 15

IV. BATTERIES AND CHARGING 19

V. OPERATION 24

VI. COMFORT ADJUSTMENTS 26

VII. DISASSEMBLY AND ASSEMBLY 29

VIII. BASIC TROUBLESHOOTING 32

IX. CARE AND MAINTENANCE 34

X. WARRANTY 38

APPENDIX I - SPECIFICATIONS 40

I. INTRODUCTION

SAFETY

WELCOME to Pride Mobility Products (Pride). The scooter you have purchased combines state-of-the-art components with **safety**, comfort, and styling in mind. We are confident that these design features will provide you with the conveniences you expect during your daily activities. Once you understand how to **safely** operate and care for your scooter, it should give you years of trouble free operation and service.

Read and **follow** all instructions, warnings, and notes in this manual and all other accompanying literature before attempting to operate this product for the first time. In addition, your **safety** depends upon you, as well as your provider, caregiver, or healthcare professional in using good judgment.

If there is any information in this manual which you do not understand or if you require additional assistance for setup or operation, please contact your authorized Pride Provider. **Failure to follow the instructions in this manual and those located on your scooter can lead to personal injury and/or damage to the scooter, including voiding the warranty.**

PURCHASER'S AGREEMENT

By accepting delivery of this product, you promise that you will not change, alter, or modify this product or remove or render inoperable or unsafe any guards, shields, or other safety features of this product; fail, refuse, or neglect to install any retrofit kits from time to time provided by Pride to enhance or preserve the safe use of this product.

SHIPPING AND DELIVERY

Before using your scooter, make sure your delivery is complete as some components may be individually packaged. If you do not receive a complete delivery, please contact your authorized Pride Provider immediately. Where damage has occurred during transport, either to the packaging or content, please contact the delivery company responsible.

INFORMATION EXCHANGE

We want to hear your questions, comments, and suggestions about this manual. We would also like to hear about the safety and reliability of your new scooter and about the service you received from your authorized Pride Provider. Please notify us of any change of address, so we can keep you apprised of important information about safety, new products, and new options that can increase your ability to use and enjoy your scooter. Please feel free to contact us at the address below:

USA:
Pride Mobility Products Corporation
Attn.: Customer Care Department
182 Susquehanna Avenue
Exeter, PA 18643-2694
info@pridemobility.com
1-800-424-8205

Canada:
Pride Mobility Products Company
380 Vansickle Road Unit 350
St. Catharines, Ontario L2R 6P7
1-888-570-1113

NOTE: If you ever lose or misplace your product registration card or your copy of this manual, contact us and we will be glad to send you a new one immediately.

II. SAFETY

PRODUCT SAFETY SYMBOLS

The symbols below are used on the scooter to identify warnings, mandatory actions, and prohibited actions. It is very important for you to read and understand them completely.

Read and follow the information in the owner's manual.

Removal of grounding prong can create electrical hazard. If necessary, properly install an approved 3-pronged adapter to an electrical outlet having 2-pronged plug access.

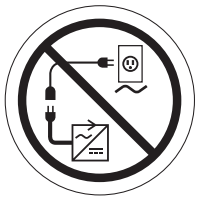

Do not connect an extension cord to the AC/DC converter or the battery charger.

II. SAFETY

GENERAL

MANDATORY! Do not operate your new scooter for the first time without completely reading and understanding this owner's manual.

Your scooter is a state-of-the-art life-enhancement device designed to increase mobility. Pride provides an extensive variety of products to best fit the individual needs of the scooter user. Please be aware that the final selection and purchasing decision regarding the type of scooter to be used is the responsibility of the scooter user who is capable of making such a decision, and his/her healthcare professional (i.e., medical doctor, physical therapist, etc.).

The contents of this manual are based on the expectation that a mobility device expert has properly fitted the scooter to the user and has assisted the prescribing healthcare professional and/or the authorized Pride Provider in the instruction process for the use of the product.

There are certain situations, including some medical conditions, where the scooter user will need to practice operating the scooter in the presence of a trained attendant. A trained attendant can be defined as a family member or care professional specially trained in assisting a scooter user in various daily living activities.

As you begin using your scooter during daily activities, you will probably encounter situations in which you will need some practice. Simply take your time and you will soon be in full and confident control as you maneuver through doorways, on and off lifts, up and down ramps, and over moderate terrain.

Below are some precautions, tips, and other safety considerations that will help you become accustomed to operating the scooter safely.

MODIFICATIONS

Pride has designed and engineered your scooter to provide maximum mobility and utility. A wide range of accessories is available from Pride to further customize your scooter to better suit your needs and/or preferences. However, under no circumstances should you modify, add, remove, or disable any feature, part, or function of your scooter.

WARNING! Do not modify your scooter in any way not authorized by Pride. Do not use accessories if they have not been tested or approved for Pride products.

REMOVABLE PARTS

WARNING! Do not attempt to lift or move your scooter by any of its removable parts, including the armrests, seat, or shroud.

PRE-RIDE SAFETY CHECK

Get to know the feel of your scooter and its capabilities. Pride recommends that you perform a safety check before each use to make sure your scooter operates smoothly and safely.

II. SAFETY

Perform the following inspections prior to using your scooter:

- Check for proper tire inflation. Maintain but do not exceed the psi/bar/kPa air pressure rating indicated on each tire if equipped with pneumatic tires.
- Check all electrical connections. Make sure they are tight and not corroded.
- Check all harness connections to the electronics tray. Make sure they are secured properly.
- Check the brakes. See IX. "Care and Maintenance."
- Check battery charge. See IV. "Batteries and Charging."

NOTE: If you discover a problem, contact your authorized Pride Provider for assistance.

WEIGHT LIMITATIONS

Your scooter is rated for a maximum weight capacity. Please refer to the specifications table for this limit. Keep in mind that the maximum weight capacity includes the combined weight of the user and any accessories mounted to the scooter.

MANDATORY! Stay within the specified weight capacity of your scooter. Exceeding the weight capacity voids your warranty. Pride will not be held responsible for injuries and/or property damage resulting from failure to observe weight limitations.

WARNING! Do not carry passengers on your scooter. Carrying passengers on your scooter may affect the center of gravity, resulting in a tip or a fall.

TIRE INFLATION

If your scooter is equipped with pneumatic tires, you should check or have the air pressure checked at least once a week. Proper inflation pressures will prolong the life of your tires and help ensure the smooth operation of your scooter.

WARNING! It is critically important that the psi/bar/kPa air pressure rating indicated on the tire be maintained in pneumatic tires at all times. Do not underinflate or overinflate your tires. Low pressure may result in loss of control, and overinflated tires may burst. Failure to maintain the psi/bar/kPa air pressure rating indicated on pneumatic tires at all times may result in tire and/or wheel failure.

WARNING! Inflate your scooter tires from a regulated air source with an available pressure gauge. Inflating your tires from an unregulated air source could overinflate them, resulting in a burst tire.

NOTE: If the tires on your scooter list the psi rating only, use the following conversion formulas to find the bar or kPa rating: bar = psi x 0.06895; kPa = psi x 6.89476.

INCLINE INFORMATION

More and more buildings have ramps with specified degrees of inclination, designed for easy and safe access. Some ramps may have turning switchbacks (180-degree turns) that require you to have good cornering skills on your scooter.

- Proceed with extreme caution as you approach the downgrade of a ramp or other incline.
- Take wide swings with your scooter's front wheel(s) around any tight corners. If you do that, the scooter's rear wheels will follow a wide arc, not cut the corner short and not bump into or get hung up on any railing corners.
- When driving down a ramp, keep the scooter's speed adjustment set to the slowest speed setting to ensure a safely controlled descent.
- Avoid sudden stops and starts.

When climbing an incline, try to keep your scooter moving. If you must stop, start up again slowly and then accelerate cautiously. When driving down an incline, do so by setting the speed adjustment dial to the slowest setting and driving in the forward direction only. If your scooter starts to move down the incline faster than you anticipated or desired, allow it to come to a complete stop by releasing the throttle control lever. Then push the throttle control lever forward slightly to ensure a safely controlled descent.

WARNING! When on any sort of an incline or decline, never place the scooter in freewheel mode, especially while seated on it or standing next to it.

WARNING! When climbing an incline, do not zigzag or drive at an angle up the face of the incline. Drive your scooter straight up the incline. This greatly reduces the possibility of a tip or a fall. Always exercise extreme caution when negotiating an incline.

WARNING! Do not drive your scooter across the side of an incline or diagonally up or down an incline; do not stop, if possible, while driving up or down an incline.

WARNING! You should not travel up or down a potentially hazardous incline (i.e., areas covered with snow, ice, cut grass, or wet leaves).

WARNING! Even though your scooter is capable of climbing slopes greater than those illustrated in figure 1, do not, under any circumstances, exceed the incline guidelines or any other specifications presented in this manual. Doing so could cause instability in your scooter.

Handicap public access ramps are not subject to government regulation in all countries, and therefore do not necessarily share the same standard percent of slope. Other inclines may be natural or, if man-made, not designed specifically for scooters. **Figure 1** illustrates your scooter's stability and its ability to climb grades under various weight loads and under controlled testing conditions.

These tests were conducted with the scooter's seat in the highest position and adjusted backward on the seat base to its farthest backward position. Use this information as a guideline. Your scooter's ability to travel up inclines is affected by your weight, your scooter's speed, your angle of approach to the incline, and your scooter setup.

WARNING! Any attempt to climb or descend a slope steeper than what is shown in figure 1 may put your scooter in an unstable position and cause it to tip.

WARNING! Never carry an oxygen tank weighing more than 15 lbs. (6.8 kg). Never fill the rear basket with contents exceeding 15 lbs. (6.8 kg).

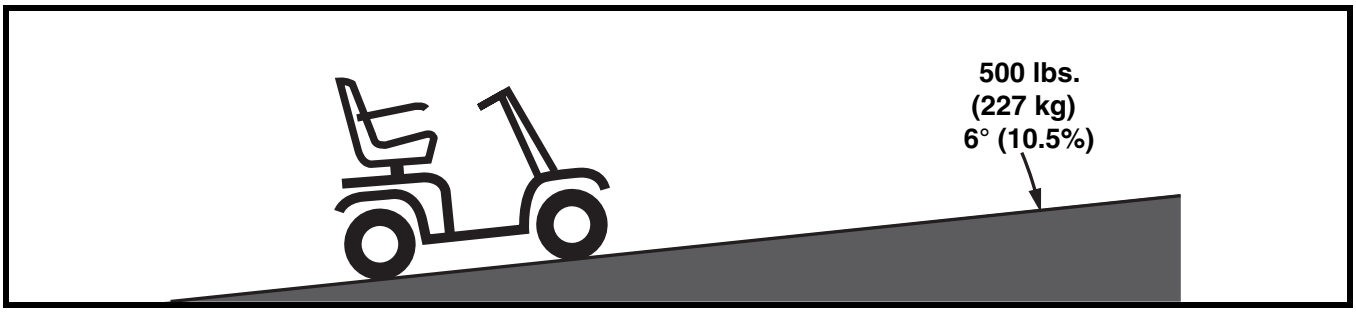

Figure 1. Maximum Recommended Incline Angle

When you approach an incline, it is best to lean forward. **See figures 2 and 2A.** This shifts the center of gravity of you and your scooter toward the front of the scooter for improved stability.

NOTE: When negotiating ramps, if the throttle control lever is released while moving forward, the powered scooter may "rollback" approximately 1 foot (30.5 cm) before the brake engages. If the throttle control lever is released while moving in reverse, the powered scooter may "rollback" approximately 3 feet (1 meter) before the brake engages.

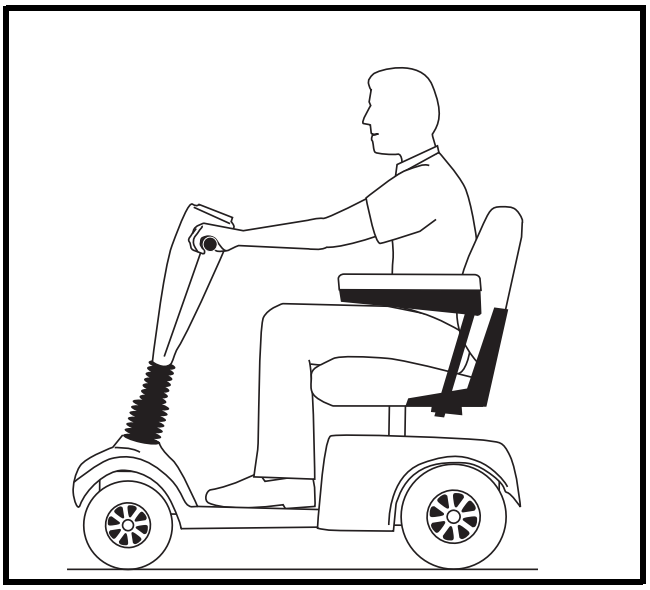

Figure 2. Normal Driving Position

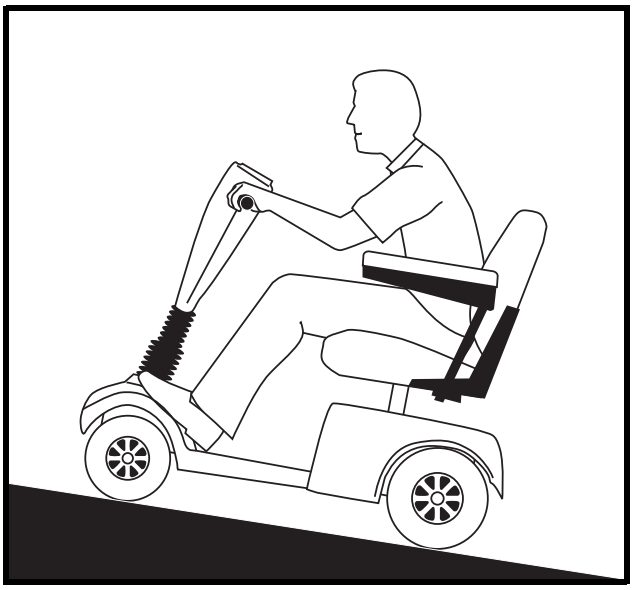

Figure 2A. Increased Stability Driving Position

CORNERING INFORMATION

Excessively high cornering speeds can create the possibility of tipping. Factors which affect the possibility of tipping include, but are not limited to, cornering speed, steering angle (how sharply you are turning), uneven road surfaces, inclined road surfaces, riding from an area of low traction to an area of high traction (such as passing from a grassy area to a paved area – especially at high speed while turning), and abrupt directional changes. High cornering speeds are not recommended. If you feel that you may tip over in a corner, reduce your speed and steering angle (i.e., lessen the sharpness of the turn) to prevent your scooter from tipping.

WARNING! When cornering sharply, reduce your speed and maintain a stable center of gravity. When using your scooter at higher speeds, do not corner sharply. This greatly reduces the possibility of a tip or fall.

BRAKING INFORMATION

Your scooter is equipped with two powerful brake systems:

- Regenerative: Uses electricity to rapidly slow the vehicle when the throttle control lever returns to the center/stop position.
- Disc Park Brake: Activates mechanically after regenerative braking slows the vehicle to near stop or when power is removed from the system for any reason.

OUTDOOR DRIVING SURFACES

Your scooter is designed to provide optimum stability under normal driving conditions—dry, level surfaces composed of concrete, blacktop, or asphalt. However, Pride recognizes that there will be times when you will encounter other surface types. For this reason, your scooter is designed to perform admirably on packed soil, grass, and gravel. Feel free to use your scooter safely on lawns and in park areas.

- Avoid driving on uneven terrain and/or soft surfaces.
- Avoid tall grass that can become tangled in the running gear.
- Avoid loosely packed gravel and sand.
- Do not use your scooter in fresh or salt water.
- Do not use your scooter at the edge of a stream, lake, or ocean.
- If you feel unsure about a driving surface, avoid that surface.

PUBLIC STREETS AND ROADWAYS

WARNING! You should not operate your scooter on public streets and roadways. Be aware that it may be difficult for traffic to see you when you are seated on your scooter. Obey all local pedestrian traffic rules. Wait until your path is clear of traffic, and then proceed with extreme caution.

STATIONARY OBSTACLES (STEPS, CURBS, ETC.)

WARNING! Do not drive near raised surfaces, unprotected ledges, and/or drop-offs (curbs, porches, stairs, etc.).

WARNING! Do not attempt to have your scooter climb or descend an obstacle that is inordinately high.

WARNING! Do not attempt to have your scooter proceed backward down any step, curb, or other obstacle. This may cause the scooter to tip.

WARNING! Be sure your scooter is traveling perpendicular to any curb you may be required to ascend or descend. See figures 3 and 4.

WARNING! Even though your scooter may be capable of handling greater obstacles, Pride recommends that you do not attempt to negotiate a curb that has a height greater than 2 in. (5 cm). Doing so could cause instability in your scooter.

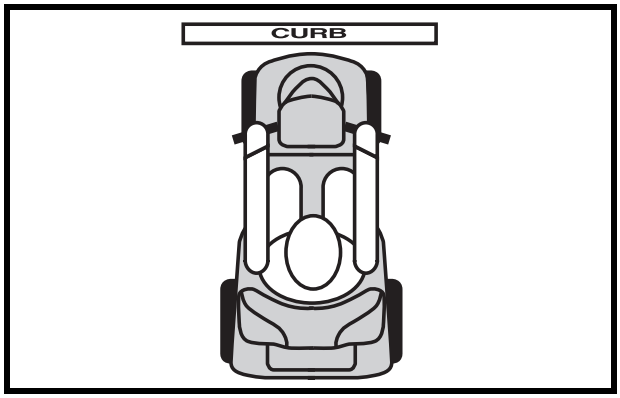

Figure 3. Correct Curb Approach

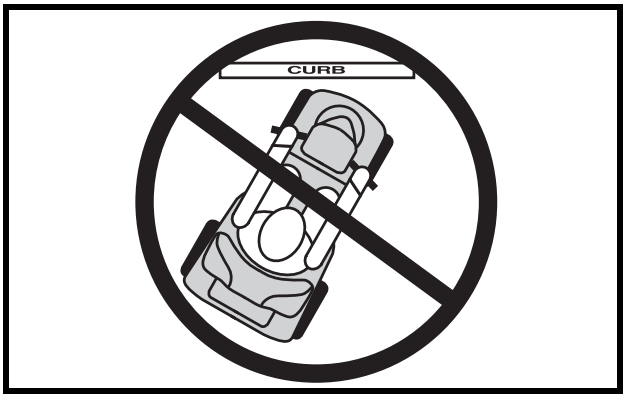

Figure 4. Incorrect Curb Approach

II. SAFETY

INCLEMENT WEATHER PRECAUTIONS

Exposure of your scooter to inclement weather conditions should be avoided whenever possible. If suddenly caught up in rain, snow, severe cold or heat while operating your scooter proceed to shelter at the earliest opportunity. Thoroughly dry your scooter before storing, charging, or operating your scooter.

PROHIBITED! Operating in rain, snow, salt, mist/spray conditions, and on icy/slippery surfaces can cause damage to the scooter and electrical system. Maintain and store your scooter in a dry and clean condition.

WARNING! Prolonged exposure to hot or cold conditions may affect the temperature of upholstered and non-upholstered items on the scooter, possibly resulting in skin irritation. Exercise caution when using your scooter in extremely hot or cold conditions or when exposing your scooter to direct sunlight for prolonged periods of time.

FREEWHEEL MODE

Your scooter is equipped with a manual freewheel lever that, when engaged, allows the scooter to be pushed. For more information about how to place your scooter into and out of freewheel mode, see III. "Your Scooter."

WARNING! When your scooter is in freewheel mode, the braking system is disengaged.

- **Disengage the drive motors only on a level surface.**
- **Ensure the key is removed from the key switch.**
- **Stand behind the scooter to engage or disengage freewheel mode. Never sit on a scooter to do this.**
- **After you have finished pushing your scooter, always return it to the drive mode to lock the brakes.**

An added feature built into the scooter is "**push-too-fast**" protection which safeguards the scooter against gaining excessive speed while in freewheel mode.

"Push-too-fast" operates differently depending on which of two conditions exists:

- If the key is switched "off" when in freewheel mode, the scooter's controller activates regenerative braking when the scooter is pushed faster than a maximum threshold which has been preprogrammed. In this case, the controller is acting as a speed governor.
- If the key is switched "on" while in freewheel mode, you will encounter considerable resistance at any speed. This prevents the scooter from gaining unwanted momentum should the manual freewheel lever inadvertently be released while driving the scooter.

STAIRS AND ESCALATORS

Scooters are not designed to travel up or down stairs or escalators. Always use an elevator.

WARNING! Do not use your scooter to negotiate steps or escalators.

DOORS

- Determine if the door opens toward or away from you.
- Use your hand to turn the knob or push the handle or push-bar.
- Drive your scooter gently and slowly forward to push the door open. Or drive your scooter gently and slowly backwards to pull the door open.

ELEVATORS

Modern elevators have a door edge safety mechanism that, when pushed, reopens the elevator door(s).

- If you are in the doorway of an elevator when the door(s) begin to close, push on the rubber door edge or allow the rubber door edge to contact the scooter and the door will reopen.
- Use care that pocketbooks, packages, or scooter accessories do not become caught in elevator doors.

NOTE: If your scooter's turning radius is greater than 60 in. (152.4 cm), it may be difficult to maneuver in elevators and building entrances. Use caution when attempting to turn or maneuver your scooter in small spaces, and avoid areas that might pose a problem.

LIFT/ELEVATION PRODUCTS

If you will be transporting your scooter during travel, you may find it necessary to use a vehicle-mounted lift system or elevation product to aid in transportation. Pride recommends that you closely review the warnings, instructions, specifications, and safety information set forth by the manufacturer of the lift/elevation product before using that product.

WARNING! Not all lift systems/elevation products are rated for use with an occupied mobility device. Pride recommends that you do not remain seated in your scooter when it is being used in connection with any type of lift system/elevation product unless:

- **That product is rated for occupied use by the manufacturer.**
- **You are able to occupy your mobility device in strict conformity with the warnings, instructions, specifications, and safety guidelines set forth by the manufacturer.**

WARNING! Always turn off the power to the unit when you are being transferred via an elevation product. Failure to do so may result in accidental throttle control lever contact, resulting in unintended movement and personal injury or product damage.

BATTERIES

In addition to following the warnings below, be sure to comply with all other battery handling information.

MANDATORY! Battery posts, terminals, and related accessories contain lead and lead compounds. Wear goggles and gloves when handling batteries and wash hands after handling.

WARNING! Scooter batteries are heavy. See specifications table. If you are unable to lift that much weight, be sure to get help. Use proper lifting techniques and avoid lifting beyond your capacity.

WARNING! Always protect the batteries from freezing and never charge a frozen battery. Charging a frozen battery may result in damage to the battery.

WARNING! Connect the battery harnesses in the proper manner. RED (+) cables must be connected to positive (+) battery terminals/posts. BLACK (-) cables must be connected to negative (-) battery terminals/posts. Protective caps should be installed over all battery terminals. REPLACE cables immediately if damaged.

BATTERY DISPOSAL AND RECYCLING

If you encounter a damaged or cracked battery, immediately enclose it in a plastic bag and call your authorized Pride Provider for instructions on disposal. Your authorized Pride Provider will also have the necessary information on battery recycling, which is our recommended course of action.

PREVENTING UNINTENDED MOVEMENT

WARNING! If you anticipate being seated in a stationary position for an extended period of time, turn off the power. This will prevent unexpected motion from inadvertent throttle control lever contact.

II. SAFETY

MOTOR VEHICLE TRANSPORT

Pride recommends that you do not remain seated in your scooter while traveling in a motor vehicle. The scooter should be stowed in the trunk of a car or in the back of a truck or van with batteries removed and properly secured. In addition, all removable scooter parts, including the armrests, seat, and shroud should be removed and/or properly secured during motor vehicle transport.

WARNING! Although your scooter may be equipped with a positioning belt, this belt is not designed to provide proper restraint during motor vehicle transport. Anyone traveling in a motor vehicle should be properly secured in the motor vehicle seat with safety belts fastened securely.

WARNING! Do not sit on your scooter while it is in a moving vehicle.

WARNING! Always be sure your scooter and its batteries are properly secured when it is being transported. Batteries should be secured in an upright position and protective caps should be installed on the battery terminals. Batteries should not be transported with any flammable or combustible items.

POSITIONING BELTS

Your authorized Pride Provider, therapist(s), and other healthcare professionals are responsible for determining your requirement for a positioning belt in order to operate your scooter safely.

WARNING! If you require a positioning belt to safely operate your scooter, make sure it is fastened securely in order to reduce the possibility of a fall from the scooter.

GETTING ONTO AND OFF OF YOUR SCOOTER

Getting onto and off of your scooter requires a good sense of balance. Please observe the following safety tips when getting onto and off of your scooter:

- Remove the key from the key switch.
- Ensure that your scooter is not in freewheel mode. See III. “Your Scooter.”
- Make certain that the seat is fixed into place.
- Flip up the seat armrests to make getting on and off the scooter easier.

WARNING! Position yourself as far back as possible in the scooter seat to prevent the scooter from tipping.

WARNING! Avoid putting all your weight on the scooter armrests and do not use the armrests for weight bearing purposes, such as transfers. Such use may cause the scooter to tip, resulting in a fall from the scooter and/or personal injury.

WARNING! Avoid putting all of your weight on the floorboard. Such use may cause the scooter to tip.

REACHING AND BENDING

Avoid reaching or bending while driving your scooter. Bending forward creates the risk of accidental throttle control lever contact. Bending to the side while seated creates the risk of tipping. It is important to maintain a stable center of gravity and keep the scooter from tipping. Pride recommends that the scooter user determine his/her personal limitations and practice bending and reaching in the presence of a qualified attendant.

WARNING! Do not bend, lean, or reach for objects if you have to pick them up from the scooter deck or from either side of the scooter. Movements such as these may change your center of gravity and the weight distribution of the scooter and cause your scooter to tip.

PROHIBITED! Keep your hands away from the tires when driving. Be aware that loose fitting clothing can become caught in drive tires.

II. SAFETY

PRESCRIPTION DRUGS/PHYSICAL LIMITATIONS

The scooter user must exercise care and common sense when operating his/her scooter. This includes awareness of safety issues when taking prescribed or over-the-counter drugs or when the user has specific physical limitations.

WARNING! Consult your physician if you are taking prescribed or over-the-counter medication or if you have certain physical limitations. Some medications and limitations may impair your ability to operate your scooter in a safe manner.

ALCOHOL/SMOKING

The scooter user must exercise care and common sense when operating his/her scooter. This includes awareness of safety issues while under the influence of alcohol or while smoking.

WARNING! Do not operate your scooter while you are under the influence of alcohol, as this may impair your ability to operate the scooter in a safe manner.

WARNING! Pride strongly recommends that you do not smoke cigarettes while seated on your scooter, although the scooter seat has passed the necessary testing requirements for cigarette smoking. You must adhere to the following safety guidelines if you decide to smoke cigarettes while seated on your scooter.

- **Do not leave lit cigarettes unattended.**
- **Keep ashtrays a safe distance from the seat cushions.**
- **Always make sure cigarettes are completely extinguished before disposal.**

ELECTROMAGNETIC AND RADIO FREQUENCY INTERFERENCE (EMI/RFI)

WARNING! Laboratory tests have shown that electromagnetic and radio frequency waves can have an adverse affect on the performance of electrically-powered mobility vehicles.

Electromagnetic and Radio Frequency Interference can come from sources such as cellular phones, mobile two-way radios (such as walkie-talkies), radio stations, TV stations, amateur radio (HAM) transmitters, wireless computer links, microwave signals, paging transmitters, and medium-range mobile transceivers used by emergency vehicles. In some cases, these waves can cause unintended movement or damage to the control system. Every electrically-powered mobility vehicle has an immunity (or resistance) to EMI. The higher the immunity level, the greater the protection against EMI. This product has been tested and has passed at an immunity level of 20 V/M.

WARNING! Be aware that cell phones, two-way radios, laptops, and other types of radio transmitters may cause unintended movement of your electrically-powered mobility vehicle due to EMI. Exercise caution when using any of these items while operating your mobility vehicle and avoid coming into close proximity of radio and TV stations.

WARNING! The addition of accessories or components to the electrically-powered mobility vehicle can increase the susceptibility of the vehicle to EMI. Do not modify your scooter in any way not authorized by Pride.

WARNING! The electrically-powered mobility vehicle itself can disturb the performance of other electrical devices located nearby, such as alarm systems.

NOTE: For further information on EMI/RFI, visit the Resource Center on www.pridemobility.com. If unintended motion or brake release occurs, turn your scooter off as soon as it is safe to do so. Contact your authorized Pride Provider to report the incident.

CONTROL CONSOLE ASSEMBLY

The control console assembly houses all of the controls you need to drive your scooter, including the key switch, speed adjustment dial, status LED, throttle control lever, battery condition meter, horn buttons, light switch, turn signal buttons, off-board charger port, and the hazard lights switch. **See figure 5.**

PROHIBITED! Do not expose the control console assembly to moisture. In the event that the control console assembly does become exposed to moisture, do not attempt to operate your scooter until the control console assembly has dried thoroughly.

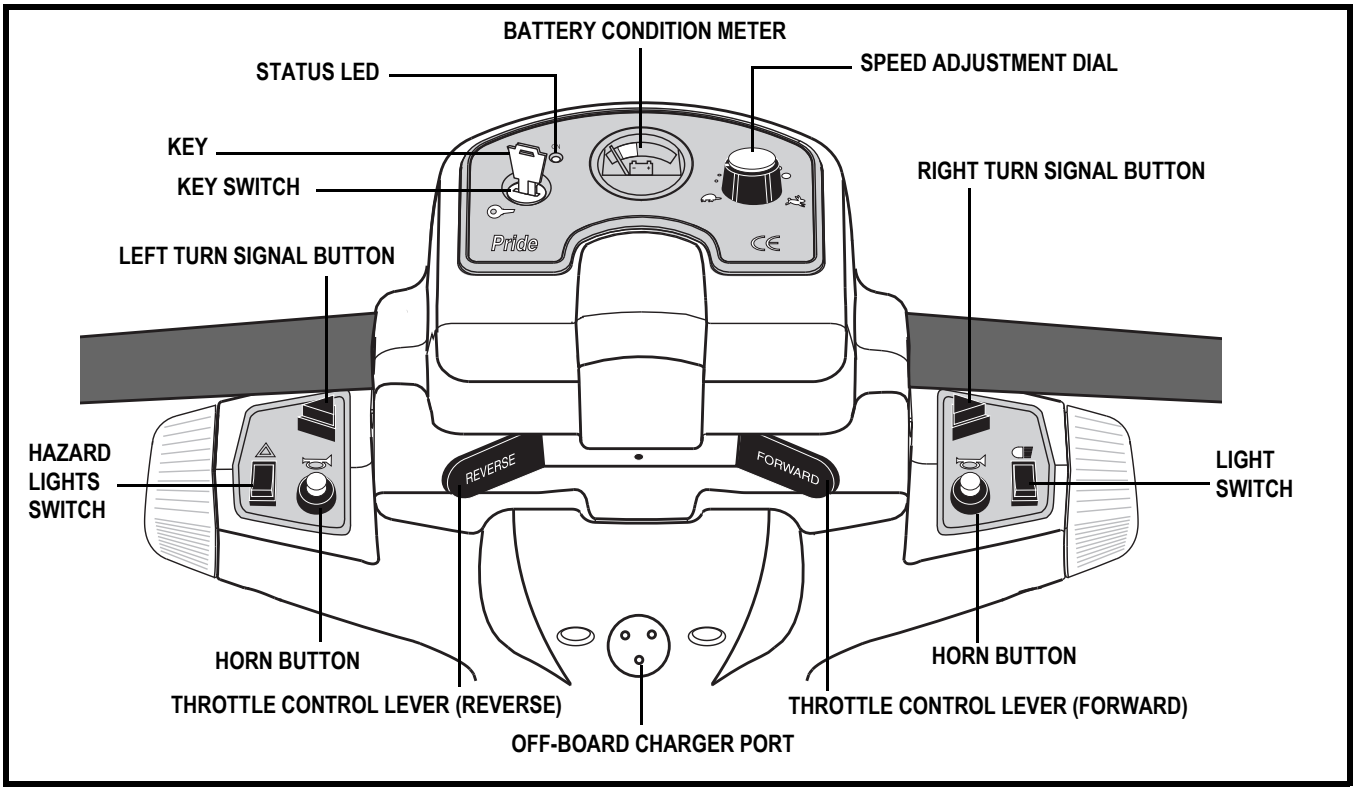

Figure 5. Control Console Assembly

Key Switch

- Fully insert the key into the key switch and turn it clockwise to power up (turn on) your scooter.
- Turn the key counterclockwise to power down (turn off) your scooter.

WARNING! If the key is moved to the "off" position while your scooter is in motion, the electronic brakes engage and your scooter comes to an abrupt stop!

Speed Adjustment Dial

This adjustment dial enables you to preselect and limit your scooter's top speed.

- The image of the tortoise represents the slowest speed setting.
- The image of the hare represents the fastest speed setting.

Status LED

The Status LED alerts you to electrical problems that may occur with the scooter. The LED remains constantly lit while your scooter is on. If the scooter develops an electrical problem, the status LED will flash a code. See VIII. "Basic Troubleshooting" for troubleshooting flash codes.

Throttle Control Lever

This lever allows you to control the forward speed and the reverse speed of your scooter up to the maximum speed you preset with the speed adjustment dial.

- Place your right hand on the right handgrip and your left hand on the left handgrip.
- Use your right thumb to push the right side of the lever to disengage your scooter's brakes and move forward.
- Release the lever and allow your scooter to come to a complete stop before pushing the other side of the lever to move in reverse.
- When the throttle control lever is completely released, it automatically returns to the center "stop" position and engages your scooter's brakes.

Battery Condition Meter

When the key is fully inserted and turned clockwise to power up your scooter, this meter indicates the approximate battery voltage strength. For further information on battery charging, see IV. "Batteries and Charging."

Horn Buttons

These buttons activate a warning horn.

- The key must be inserted and turned clockwise for the horn to be operational.
- Do not hesitate to use the warning horn when its use could prevent accident or injury.

Light Switch

This switch controls your scooter's lighting system. Toggle this switch to turn on and turn off the lights.

WARNING! Scooter users are required to use their lights when visibility is restricted—day or night.

Turn Signal Buttons

Use these buttons to turn on the left and right turn signal lights.

- Press the appropriate turn signal button once to activate it.
- Your scooter's turn signals are timed to shut off automatically.

Hazard Lights Switch

This switch activates the 4-way flashers on your scooter. Toggle this switch to turn on and turn off the lights.

Off-board Charger Port

The scooter's off-board charger plugs into this port.

REAR SECTION

The manual freewheel lever, the anti-tip wheels, the motor/transaxle assembly (not shown), the electronics module, the batteries (not shown), the main circuit breaker (reset button), and the fuses are located on the rear section of your scooter. **See figure 6.** Refer to VII. "Disassembly and Assembly" for instructions on removing the rear shroud.

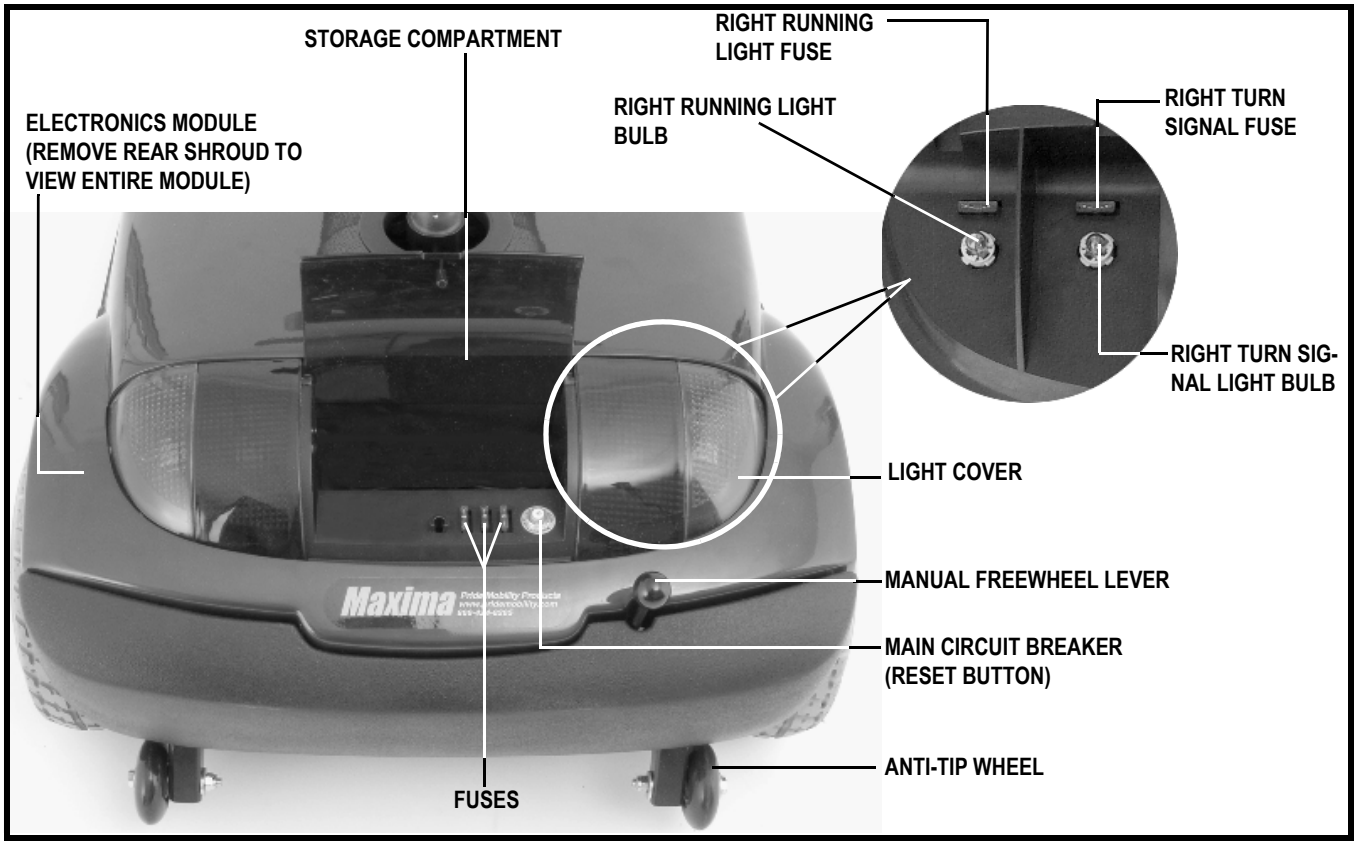

Figure 6. Rear Section

Manual Freewheel Lever

Whenever you need or want to push your scooter for short distances, you can put it in freewheel mode.

1. Pull up firmly on the manual freewheel lever to disable the drive system and the brake system.
2. You may push your scooter.
3. Push down firmly on the manual freewheel lever to reengage the drive system and the brake system and take your scooter out of freewheel mode.

WARNING! When your scooter is in freewheel mode, the braking system is disengaged.

- **Disengage the drive motors only on a level surface.**
- **Ensure the key is removed from the key switch.**
- **Stand to the side of the scooter to engage or disengage freewheel mode. Never sit on a scooter to do this.**
- **After you have finished pushing your scooter, always return it to the drive mode to lock the brakes.**

Anti-tip Wheels

The front (not shown) and rear anti-tip wheels are an integral and important safety feature of your scooter. They are bolted to the frame at the front and rear of the scooter.

PROHIBITED! Do not remove the anti-tip wheels or modify your scooter in any way that is not authorized by Pride.

Motor/Transaxle Assembly (Not Shown)

The motor/transaxle assembly is the electromechanical unit that converts the electrical energy of your scooter's batteries into the controlled mechanical energy that drives the scooter's wheels.

Electronics Module

The electronics module houses all of the scooter's harness mating plugs and electronic components for charging the batteries.

Batteries (Not Shown)

The batteries store the electrical energy that powers your scooter. See IV. "Batteries and Charging."

Main Circuit Breaker (Reset Button)

When the voltage in your scooter's batteries becomes low or your scooter is heavily strained because of excessive loads or steep inclines, the main circuit breaker may trip to protect your scooter's motor and electronics from damage.

- The main circuit breaker reset button pops out when the breaker trips.
- When the breaker trips, the entire electrical system of your scooter shuts down.
- Allow a minute or two for your scooter's electronics to "rest."
- Push in the reset button to reset the breaker.
- If the breaker trips frequently, you may need to charge your batteries more often. You may also need to have your authorized Pride Provider perform a load test on your scooter's batteries.
- If the main circuit breaker trips repeatedly, see your authorized Pride Provider for service.

Fuses

The fuses help protect your scooter's lighting, control console assembly, and charging systems from receiving an overload of electrical current. The fuses used in the scooter are the same type automobiles use.

If a fuse must be replaced, use only the specified amp fuse. See IX. "Care and Maintenance."

Docking Device Assembly

Your scooter is equipped with a docking device assembly. **See figure 7.** In order to utilize the docking device, it is necessary to purchase an insert (T-bar or Bullnose and C-arm) that, when used with the lift system, will aid in lifting your scooter.

Contact your authorized Pride Provider for more information about the docking device.

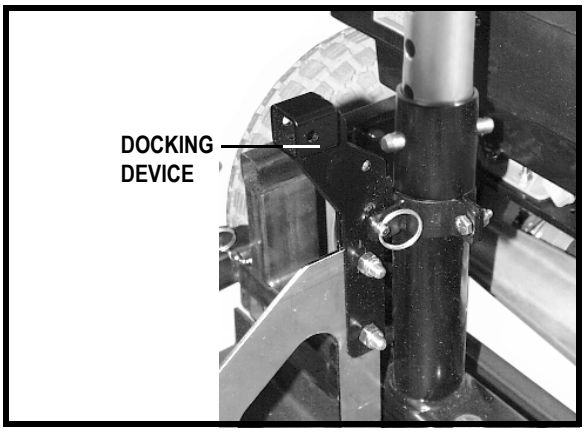

Figure 7. Docking Device Assembly

IV. BATTERIES AND CHARGING

BATTERIES AND CHARGING

Your scooter requires two long-lasting, 12-volt, deep-cycle batteries that are sealed and maintenance free. They are recharged by an off-board charging system.

- Charge your scooter's batteries prior to using it for the first time.
- Keep the batteries fully charged to keep your scooter running smoothly.

READING YOUR BATTERY VOLTAGE

The battery condition meter on the control console assembly indicates the approximate strength of your batteries using a color code. From right to left, green indicates fully charged batteries, yellow indicates a draining charge, and red indicates that an immediate recharge is necessary. **See figure 8.** To ensure the highest accuracy, the battery condition meter should be checked while operating your scooter at full speed on a dry, level surface.

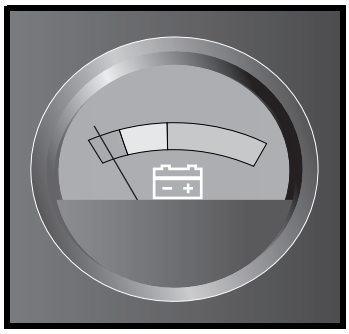

Figure 8. Battery Condition Meter

CHARGING YOUR BATTERIES

PROHIBITED! Never use an extension cord to plug in your battery charger. Plug the charger directly into a properly wired standard electrical outlet.

PROHIBITED! Removal of grounding prong can create electrical hazard. If necessary, properly install an approved 3-pronged adapter to an electrical outlet having 2-pronged plug access.

PROHIBITED! Do not allow unsupervised children to play near the scooter while the batteries are charging. Pride recommends that you do not charge the batteries while the scooter is occupied.

MANDATORY! Read the battery charging instructions in this manual and in the manual supplied with the battery charger before charging the batteries.

WARNING! Explosive gases may be generated while charging the batteries. Keep the scooter and battery charger away from sources of ignition such as flames or sparks and provide adequate ventilation when charging the batteries.

WARNING! Ensure that both ends of the charger power cord are clean and dry before plugging the charger power cord into the off-board charger port or the electrical outlet.

WARNING! Inspect the battery charger, wiring, and connectors for damage before each use. Contact your authorized Pride Provider if damage is found.

WARNING! Do not attempt to open the battery charger case. If the battery charger does not appear to be working correctly, contact your authorized Pride Provider.

WARNING! If the off-board battery charger is equipped with cooling slots, then do not attempt to insert objects through these slots.

WARNING! If your battery charger has not been tested and approved for outdoor use, then do not expose it to adverse or extreme weather conditions. If the battery charger is exposed to adverse or extreme weather conditions, then it must be allowed to adjust to the difference in environmental conditions before use indoors. Refer to the manual supplied with the battery charger for more information.

IV. BATTERIES AND CHARGING

Follow these easy steps to charge your batteries safely:

1. Position your scooter close to a standard electrical outlet.
2. Remove the key from the key switch.
3. Make certain that the manual freewheel lever is in the drive (down) position.
4. Plug the 3-pin charger power cord into the off-board charger port. **See figures 5 and 9.**
5. Extend the charger power cord and plug it into the electrical outlet. We recommend that you charge the batteries for 8 to 14 hours.
6. When the batteries are fully charged, unplug the charger power cord from the electrical outlet and then from the off-board charger port.

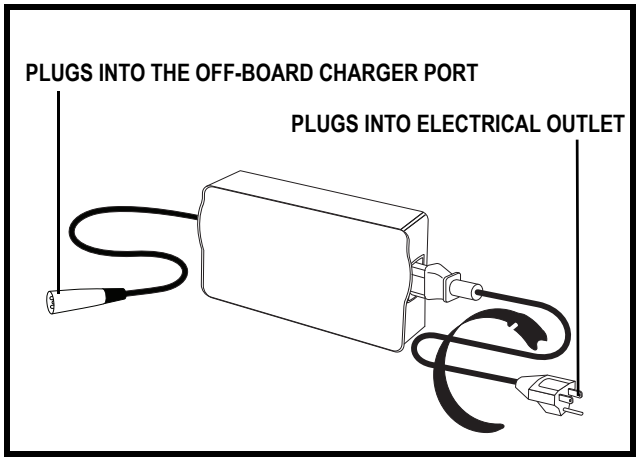

Figure 9. Off-board Charger

NOTE: The LED lights on the charger indicate different charger conditions at various times: charger power on, charging in progress, and charging complete. Refer to the manual supplied with the charger for a complete explanation of these indicators.

NOTE: There is a charger inhibit function on your scooter. The scooter will not run and the battery condition meter will not operate while the batteries are charging.

FREQUENTLY ASKED QUESTIONS

How does the charger work?
When your scooter's battery voltage is low, the charger works harder and sends more electrical current to the batteries to bring up their charge. As the voltage of the batteries approaches a full charge, the charger sends less and less electrical current to the batteries. When the batteries are fully charged, the current sent to them from the charger is at nearly zero amperage. Therefore, when the charger is plugged in, it maintains the charge on your scooter's batteries, but does not overcharge them. We do not recommend that you charge your scooter's batteries for more than 24 consecutive hours.

What if my scooter's batteries won't charge?

- Ensure the red (+) and black (-) battery cables are connected properly to the battery terminals.
- Ensure both battery harnesses that extend from the batteries are plugged into their mating harness leading to the charger.
- Ensure both ends of the charger power cord are inserted fully.

Can I use a different charger?
Chargers are selected precisely for particular applications and are especially matched to the type, size, and chemical formulation of specific batteries. For the safest and most efficient charging of your scooter's batteries, we recommend use of the charger supplied as original equipment with your Pride product only. Any charging method resulting in batteries being charged individually is especially prohibited.

How often must I charge the batteries?
Two major factors must be considered when deciding how often to charge your scooter's batteries:

- All day scooter use on a daily basis.
- Infrequent or sporadic scooter use.

IV. BATTERIES AND CHARGING

With these considerations in mind, you can determine just how often and for how long you should charge your scooter's batteries. We designed the battery charger so that it will not overcharge your scooter's batteries (do not charge them for more than 24 consecutive hours). However, you may encounter some problems if you do not charge your batteries often enough and if you do not charge them on a regular basis. Following the five guidelines below will provide safe and reliable battery operation and charging.

- If you use your scooter daily, charge its batteries as soon as you finish using it for the day. Your scooter will be ready each morning. We recommend that you charge your scooter's batteries for 8 to 14 hours after daily use.
- If you use your scooter once a week or less, charge its batteries at least once a week for 12 to 14 hours at a time.
- Keep your scooter's batteries fully charged.
- Avoid deeply discharging your scooter's batteries.

How can I get maximum range or distance per charge?
Rarely will you have ideal driving conditions—smooth, flat, hard driving surfaces with no wind or curves. You will often face hills, sidewalk cracks, uneven and loosely packed surfaces, curves, and wind. All of these driving conditions affect the distance or running time per battery charge. Below are a few suggestions for obtaining the maximum range per battery charge.

- Always fully charge your scooter's batteries prior to your daily use.
- Maintain but do not exceed the psi/bar/kPa air pressure rating indicated on pneumatic tires.
- Plan your route ahead to avoid as many hills, cracked, broken, or soft surfaces as possible.
- Limit your baggage weight to essential items.
- Try to maintain an even speed while your scooter is in motion.
- Avoid stop-and-go driving.

What type and size of battery should I use?
We recommend deep-cycle batteries that are sealed and maintenance free. Both AGM and Gel-Cell are deep-cycle batteries that are similar in performance. Do not use wet-cell batteries, which have removable caps.

WARNING! Corrosive chemicals are contained in batteries. Use only AGM or Gel-Cell batteries to reduce the risk of leakage or explosive conditions.

NOTE: Sealed batteries are not serviceable. Do not remove the caps.

How do I change a battery in my scooter?
Your scooter requires two 12-volt, deep cycle, U-1 (31-36 Ah) batteries that are sealed and maintenance free. Only sealed, non-spillable batteries that meet DOT CRF 173.159 should be used with your scooter. Replacement batteries should be obtained from your authorized Pride Provider to ensure proper conformability, fit, and function.

MANDATORY! Battery posts, terminals, and related accessories contain lead and lead compounds. Wear goggles and gloves when handling batteries and wash hands after handling.

WARNING! Always use two batteries of the exact same type, chemistry, and amp-hour (Ah) capacity. Refer to the specifications table in this manual and in the manual supplied with the battery charger for recommended type and capacities.

WARNING! Contact your authorized Pride Provider if you have any questions regarding the batteries in your scooter.

WARNING! Do not replace the batteries while the scooter is occupied.

WARNING! The batteries on your scooter should only be serviced or replaced by an authorized Pride Provider or a qualified technician.

IV. BATTERIES AND CHARGING

PROHIBITED! Keep tools and other metal objects away from the battery terminals. Contact with tools can cause electrical shock.

You may need the following to change your batteries:

- metric/standard socket set and ratchet
- adjustable wrench

To change the batteries in your scooter:

1. Remove the seat and the rear shroud. See VII. "Disassembly and Assembly."
2. Disconnect the battery tie-down straps.
3. Disconnect the battery harnesses from the rear electronics module.
4. Disconnect the battery cables from the battery terminals.
5. Remove the old battery.
6. Place a new battery in the battery well.
7. Connect the red battery cable to the positive (+) battery terminal.
8. Connect the black battery cable to the negative (-) battery terminal.
9. Reconnect the battery harnesses to the rear electronics module.
10. Reconnect the battery tie-down straps.
11. Reinstall the rear shroud and the seat.

NOTE: If you encounter a damaged or cracked battery, immediately enclose it in a plastic bag and contact your local waste disposal agency or your authorized Pride Provider for instructions on disposal and battery recycling, which is our recommended course of action.

Why do my new batteries seem weak?

Deep-cycle batteries employ a different chemical technology than is used in car batteries, nickel-cadmium batteries (nicads), or in other common battery types. Deep-cycle batteries are specifically designed to provide power, drain down their charge, and then accept a relatively quick recharge.

We work closely with our battery manufacturer to provide batteries that best suit your scooter's specific electrical demands. Fresh batteries arrive daily at Pride and are shipped fully charged to our customers. During shipping, the batteries may encounter temperature extremes that may influence their initial performance. Heat diminishes the charge on the battery; cold slows the available power and extends the time needed to recharge the battery.

It may take a few days for the temperature of your scooter's batteries to stabilize and adjust to their new room or ambient temperature. More importantly, it takes a few charging cycles (a partial drain followed by a full recharge) to establish the critical chemical balance that is essential to a deep-cycle battery's peak performance and long life.

Follow these steps to properly break in your scooter's new batteries for maximum efficiency and service life:

1. Fully recharge any new battery prior to its initial use. This charging cycle brings the battery up to about 88% of its peak performance level.
2. Operate your new scooter in familiar and safe areas. Drive slowly at first and do not travel too far from your home or familiar surroundings until you have become accustomed to your scooter's controls and have properly broken in your scooter's batteries.
3. Fully recharge the batteries. They should be at over 90% of their peak performance level.
4. Operate your scooter again.

IV. BATTERIES AND CHARGING

How can I ensure maximum battery life?
Fully charged deep-cycle batteries provide reliable performance and extended battery life. Keep your scooter's batteries fully charged whenever possible. Batteries that are regularly and deeply discharged, infrequently charged, or stored without a full charge may be permanently damaged, causing unreliable performance and limited service life.

What about public transportation?
If you intend to use public transport with your scooter, you must contact the transportation provider in advance to determine their specific requirements.

V. OPERATION

BEFORE GETTING ON YOUR SCOOTER

- Have you fully charged the batteries? See IV. “Batteries and Charging.”
- Is the manual freewheel lever in the drive (down) position? Never leave the manual freewheel lever pulled up unless you are manually pushing your scooter.

GETTING ONTO YOUR SCOOTER

1. Make certain that the key is removed from the key switch.

WARNING! Never attempt to get onto or off your scooter without first removing the key from the key switch. This will prevent the scooter from moving if accidental throttle control lever contact is made.

2. Stand at the side of your scooter.
3. Push down on the seat rotation lever and rotate the seat until it is facing you.
4. Make certain that the seat is fixed securely in position.
5. Position yourself comfortably and securely in the seat.
6. Push down on the seat rotation lever and rotate the seat until you are facing forward.
7. Make certain that the seat is fixed securely in position.
8. Make certain that your feet are safely on the floorboard.

PRE-RIDE ADJUSTMENTS AND CHECKS

- Is the seat at the proper height?
- Is the seat fixed securely in place?
- Is the tiller at a comfortable setting and locked securely in place? See VI. “Comfort Adjustments.”
- Is the key fully inserted into the key switch and turned clockwise to the “on” position? See III. “Your Scooter.”
- Does the scooter’s horn work properly?
- Is your proposed path clear of people, pets, and obstacles?
- Have you planned your route to avoid adverse terrain and as many inclines as possible?

OPERATING YOUR SCOOTER

WARNING! The following can adversely affect steering and stability while operating your scooter:

- **Holding onto or attaching a leash to walk your pet**
- **Carrying passengers (including pets)**
- **Hanging any article from the tiller**
- **Towing or being pushed by another motorized vehicle**

WARNING! Keep both hands on the tiller and your feet on the floorboard at all times while operating your scooter. This driving position gives you the most control over your vehicle.

- Set the speed adjustment dial to your desired speed.
- Press your thumb against the appropriate side of the throttle control lever.
- The electromechanical disc park brake automatically disengages and the scooter accelerates smoothly to the speed you preselected with the speed adjustment dial.
- Pull on the left handgrip to steer your scooter to the left.
- Pull on the right handgrip to steer your scooter to the right.
- Move the tiller to the center position to drive straight ahead.
- To stop, slowly release the throttle control lever. The electronic brakes will automatically engage when your scooter comes to a stop.

NOTE: Your scooter’s reverse speed is slower then that of the forward speed you preset with the speed adjustment dial.

GETTING OFF OF YOUR SCOOTER

1. Bring your scooter to a complete stop.
2. Remove the key from the key switch.
3. Push down on the seat rotation lever and rotate the seat until you are facing toward the side of your scooter.
4. Make certain that the seat is fixed securely in position.
5. Carefully and safely get out of the seat and stand to the side of your scooter.
6. You can leave the seat facing to the side to facilitate boarding your scooter next time.

POWER DOWN TIMER FEATURE

Your scooter is equipped with an energy saving automatic power down timer feature designed to preserve your scooter's battery life. If you mistakenly leave the key in the key switch and in the "on" position but do not use your scooter for approximately 20 minutes, the scooter's controller shuts down automatically. Although the controller is shut down and the scooter will not move, power will still be supplied to the scooter's lighting system.

If the power down timer feature takes effect, perform the following steps to resume normal operation:

1. Turn the key to the "off" position.
2. Turn the key back to the "on" position.

VI. COMFORT ADJUSTMENTS

TILLER ANGLE ADJUSTMENT

WARNING! Remove the key from the key switch before adjusting the tiller or the seat. Never attempt to adjust the tiller or the seat while the scooter is in motion.

Your scooter is equipped with a pivoting tiller that allows adjustment to several positions.

1. Lift the tiller adjustment lever. **See figure 10.**
2. Move the tiller to a comfortable position.
3. Release the tiller adjustment lever to secure the tiller in position.

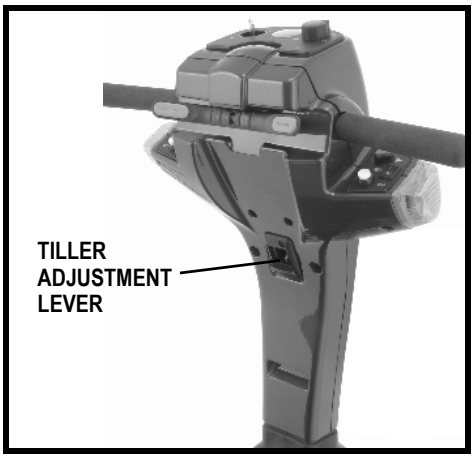

Figure 10. Tiller Adjustment Lever

SEAT ROTATION ADJUSTMENT

The seat rotation lever secures the seat in one of four positions. **See figure 11.**

1. Push the seat rotation lever down to disengage the seat.
2. Rotate the seat to the desired position.
3. Release the seat rotation lever to fix the seat securely in place.

FRONT-TO-BACK SEAT ADJUSTMENT

You can reposition the scooter's seat forward or backward to one of three settings to adjust the distance between the seat and the tiller. **See figure 11.**

1. Remove the seat from your scooter. See VII. "Disassembly and Assembly."
2. Remove the four bolts that fasten the seat to the seat platform.
3. Align the seat platform with the desired set of holes on the seat.
4. Install the four bolts securely.

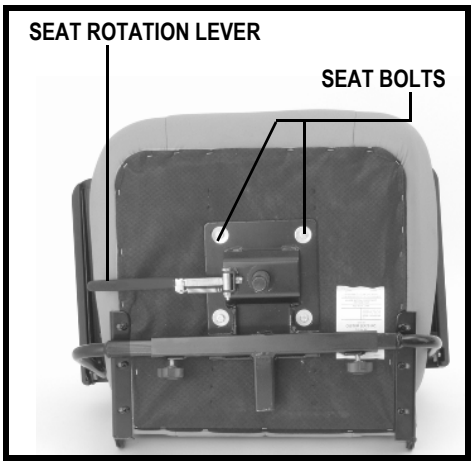

Figure 11. Seat Adjustments

ARMREST WIDTH ADJUSTMENT

The armrests can be adjusted inward or outward. **See figure 12.**

1. Loosen the armrest adjustment knobs at the back of the seat frame.
2. Slide the armrests in or out to the desired width.
3. Tighten the armrest adjustment knobs.

The armrests also pivot upward to make getting onto and off of your scooter easier.

ARMREST HEIGHT ADJUSTMENT

The height of both armrests can be adjusted upward or downward. **See figure 12.**

1. Loosen the two setscrews located on the armrest receiver.
2. Raise or lower the armrest to the desired height.
3. Tighten the setscrews to secure the armrest.

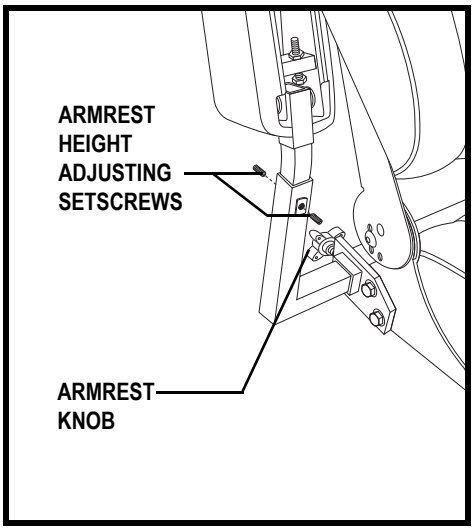

Figure 12. Armrest Adjustments

SEATBACK ADJUSTMENT

The seatback may be positioned to four different angles: 90°, 100°, 102°, and 105°. **See figure 13.**

To adjust the seatback angle:

1. Loosen and remove the adjustment screw from the seatback hinge on both sides of the seat.
2. Reposition the seatback to the desired angle.
3. Align the adjustment holes from the upper and lower hinge, so the adjustment screw can easily pass through.
4. Reinsert both adjustment screws and tighten.

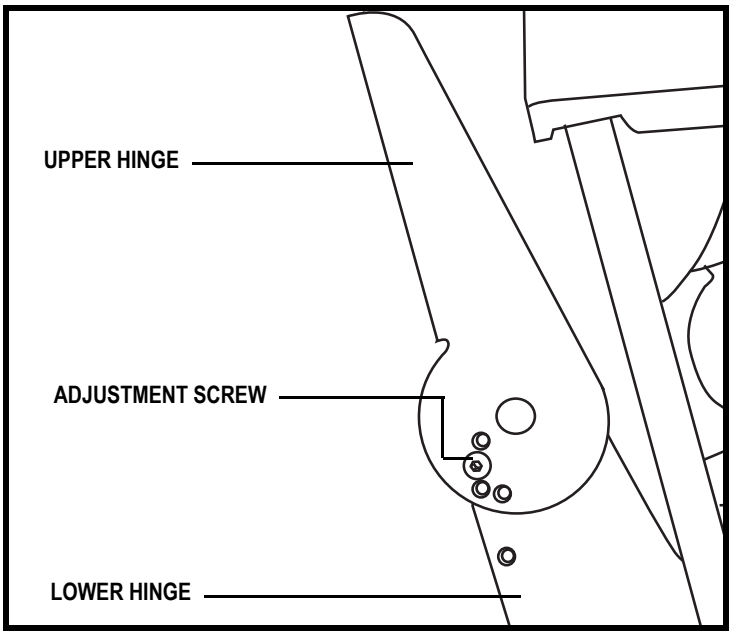

Figure 13. Seatback Hinge

SEAT HEIGHT ADJUSTMENT

The seat can be repositioned to different heights. **See figure 14.**

1. Remove the seat and rear shroud from your scooter. See VII. "Disassembly and Assembly."
2. Loosen the nut and remove it from the bolt, and remove the bolt and washers from the lower seat post.
3. Raise or lower the upper seat post to the desired seat height.
4. While holding the upper seat post at that height, match up the holes in the upper seat post with those of the lower seat post.
5 Reinstall the bolt, washers, and nut to secure the seat post.

NOTE: Ensure both washers have been reinstalled before fully tightening the nut.

6. Reinstall the rear shroud and the seat.

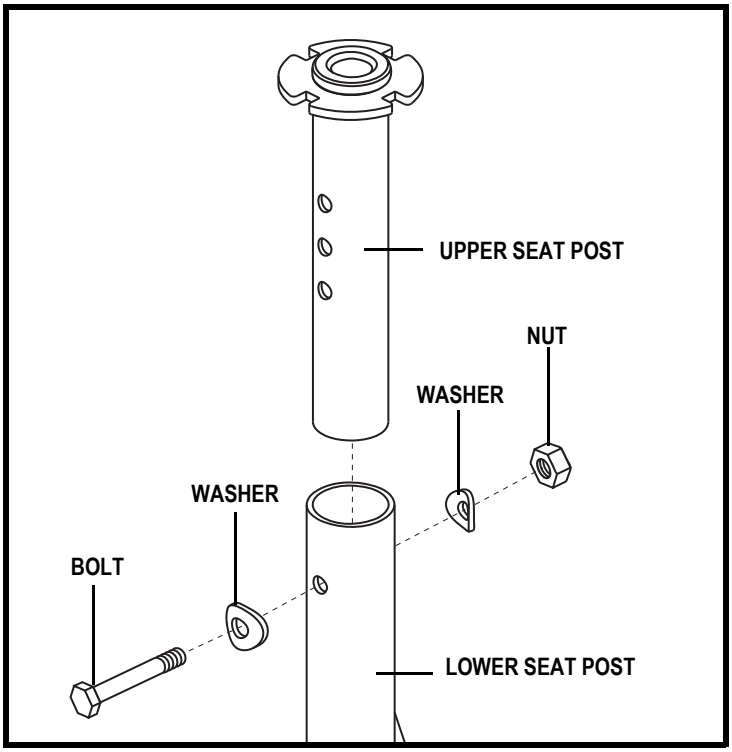

Figure 14. Seat Height Adjustment

VI. COMFORT ADJUSTMENTS

POWER SEAT ADJUSTMENT

Your scooter may be equipped with a power seat. The power seat actuator is designed to raise or lower the seat with minimal effort on the part of the operator. The power seat switch is located on the control console.

WARNING! The power seat is intended for operation only while your scooter is stationary and on a level surface. Its purpose is to aid you in reaching objects. Drive your scooter only with the power seat in the lowest position. Driving the scooter with the power seat elevated could cause instability in the scooter, resulting in a tip or a fall.

Strict adherence to the following safety rules is vital to your safety:

- **Operate the power seat only while completely stationary on level ground.**
- **Do not press the throttle control lever and the power seat switch at the same time.**
- **Do not operate your scooter with the power seat elevated. Operate the scooter only with the power seat fully retracted (in the lowest position).**
- **Never place your scooter in freewheel mode with the power seat elevated.**
- **Use extreme caution when reaching for objects with your power seat elevated. Do not overextend or attempt to pick up objects that might affect your balance.**
- **Do not attempt to raise or lower the seat while in motion.**

Before operating the power seat, ensure your scooter is level and stationary and the speed adjustment dial is set to the slowest setting.

To operate the power seat:

1. Press and hold the upper part of the power seat switch to raise the seat. Release the switch when you have attained your desired height or upon reaching the highest position.
2. Press and hold the lower part of the power seat switch to lower the seat. Release the switch when you have attained your desired height or upon reaching the lowest position.

NOTE: The scooter must be stopped in order for the power seat to be operated. If the power seat switch is pressed while the scooter is in motion, the scooter will slow and come to a stop. The scooter may also produce a fault code. If a fault code occurs, you will need to turn the scooter's power off, then back on again before proceeding.

Instances may occur when the power seat is raised to reach something or get a better vantage point and not returned to its lowest position before operating the scooter again. Depending on how high the power seat is raised, your scooter's speed will be reduced when operating the scooter.

Elevating the power seat to approximately one-half its maximum height limits your scooter's speed to half that set with the speed adjustment dial. If the power seat is elevated to approximately three-quarters its maximum height, the scooter will not move if the throttle control lever is pressed. The power seat must be lowered to slightly under three-quarters of its maximum height in order to drive the scooter agian. The scooter cannot be driven at full speed until the scooter's seat is lowered to approximately one-half its maximum height.

It is strongly recommended that the scooter not be operated with the power seat elevated.

VII. DISASSEMBLY AND ASSEMBLY

DISASSEMBLY

You can disassemble the scooter into seven pieces: the seat, the front section, the rear section, the rear shroud, the basket, and the batteries. **See figure 15.** No tools are required to disassemble or assemble your scooter, but keep in mind that the disassembled sections of the scooter take up more floor space than the assembled unit. Always disassemble or assemble your scooter on a level, dry surface with sufficient room for you to work and move around your scooter-about 5 feet (2 meters) in all directions. Remember that some scooter components are heavy and you may need assistance when lifting them.

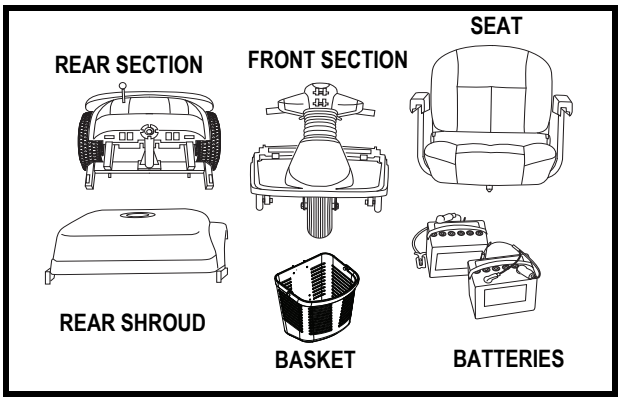

Figure 15. The Scooter Disassembled

WARNING! Do not lift beyond your physical capability. Ask for assistance when necessary while disassembling or assembling your scooter.

To disassemble the scooter:

1. Place the manual freewheel lever in the drive (down) position.
2. Lift the seat straight up and off the scooter. **See figure 16.**
3. Gently lift the rear shroud off of the scooter. **See figure 17.**
4. Disconnect the battery tie-down strap that holds the batteries in place.
5. Unplug both black and white 2-pin battery harnesses. **See figure 18.**
6. Unplug the front-to-rear harness from its mating plug. **See figure 19.**

WARNING! Failure to unplug both battery harnesses and the front-to-rear harness prior to frame separation could result in permanent damage to the scooter.

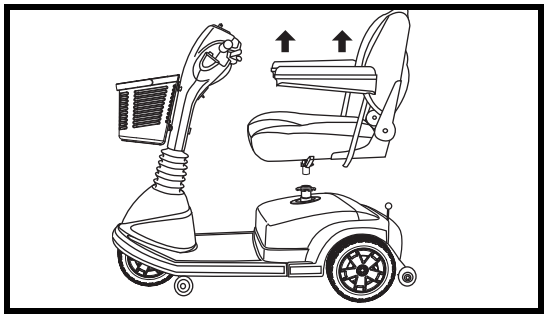

Figure 16. Seat Removal

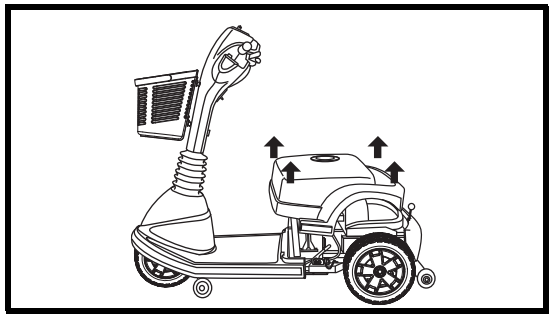

Figure 17. Rear Shroud Removal

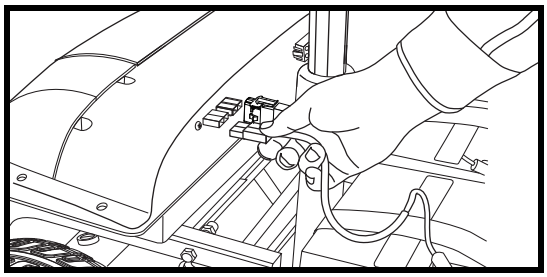

Figure 18. Disconnecting The Battery Harnesses

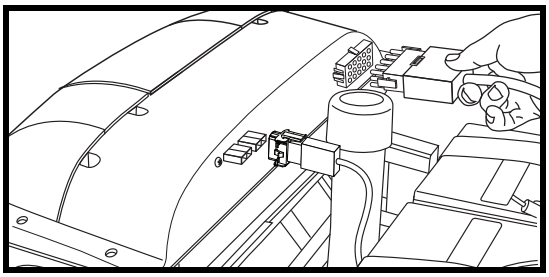

Figure 19. Disconnecting The Front-To-Rear-Harness

NOTE: There is no need to disconnect the motor harness when disassembling the scooter. See figure 20.

7. Lift both batteries off the scooter. **See figure 21.**
8. Push the locking cam levers forward to the unlocked position and remove the ball detent pins. **See figures 22 and 23.**
9. Remove the frame handle ball detent pin. **See figure 24.**
10. Gently slide the two sections of the scooter apart. **See figure 25.**
11. Grab the hand grip on the tiller, pull upward on the tiller adjustment lever, and fully lower the tiller down to the center of the scooter chassis.

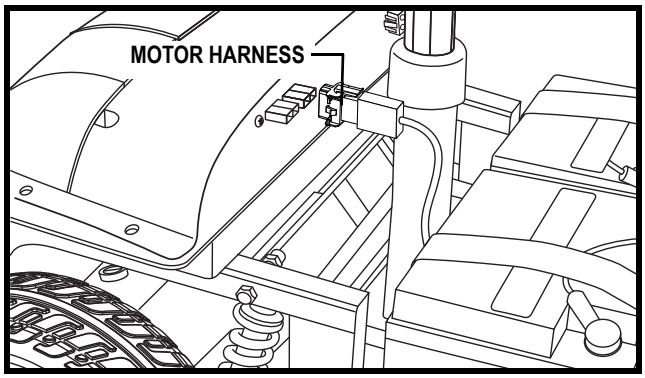

Figure 20. Motor Harness

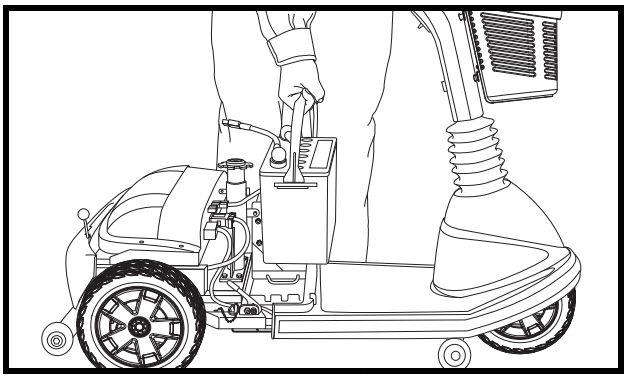

Figure 21. Battery Removal

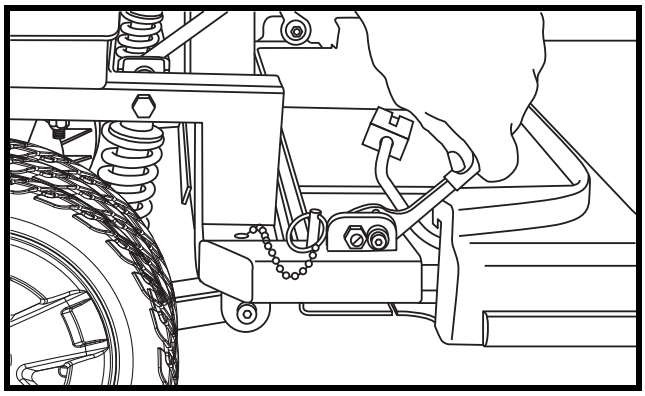

Figure 22. Locking Cam Levers (Unlocked Position)

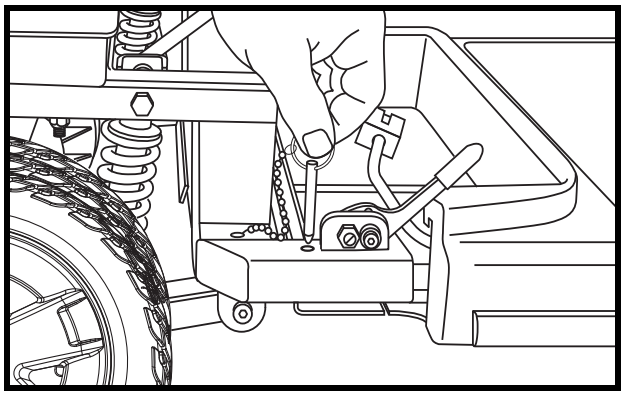

Figure 23. Frame Lock-up Ball Detent Pins

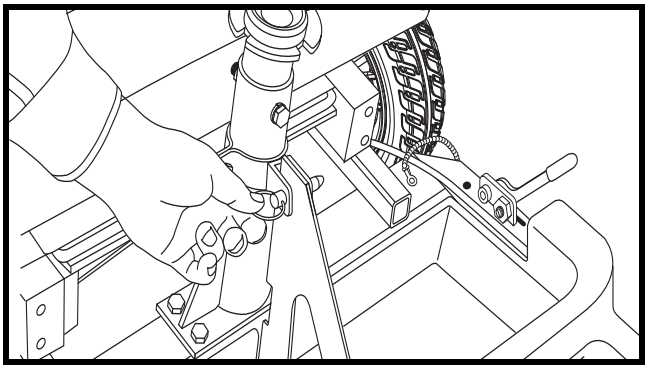

Figure 24. Frame Handle Ball Detent Pin

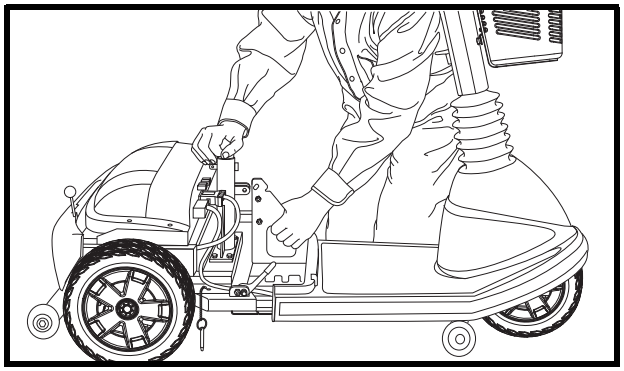

Figure 25. Frame Separation

ASSEMBLY

NOTE: Raise the tiller before starting to reassemble the scooter.

1. Place the manual freewheel lever in the drive (down) position.
2. Position the front and rear sections next to each other.
3. Tilt the rear end to a horizontal position and insert the longer tube of the front end into the rear section first; make sure that the locking cam levers are in the unlocked (forward) position and the ball detent pins are removed.
4. Slide the two sections of the unit together until the front half reaches its insertion limit.
5. Secure the front and rear sections with the ball detent pins.
6. Push the locking cam levers back to their locked (upward) position.
7. Replace the frame handle ball detent pins.
8. Plug the front-to-rear harness into its mating plug.
9. Put the batteries in place and plug both black and white 2-pin battery harnesses into their mating plugs.
10. Reconnect the battery tie-down strap.
11. Reinstall the rear shroud.
12. Reinstall the seat.
13. Rotate the seat until it is securely in place.

VIII. BASIC TROUBLESHOOTING

Any electromechanical device occasionally requires some troubleshooting. However, most of the problems that may arise can usually be solved with a bit of thought and common sense. Many of these problems occur because the batteries are not fully charged or because the batteries are worn down and can no longer hold a charge.

DIAGNOSTIC FLASH CODES

The diagnostic flash codes for your scooter are designed to help you perform basic troubleshooting quickly and easily. A diagnostic flash code flashes from the status LED in the event one of the conditions listed below develops.

NOTE: Your scooter will not run unless the flash code condition is resolved and the scooter has been turned off, then turned back on.

FLASH CODE	CONDITION	SOLUTION
■■ (2)	Battery voltage is too low to operate the scooter.	Charge fully until charger and any meters indicate completion.
■■■ (3)	Battery voltage is too high to operate the scooter.	Contact your authorized Pride Provider for assistance.
■■■■■ (5)	Solenoid brake trip. The manual freewheel lever may be in the freewheel position.	Remove the key, then push the manual freewheel lever to the drive position, restart your scooter.
■■■■■■ (6)	Throttle trip. The throttle control lever may have been depressed while inserting the key.	Release the throttle control lever completely, then reinsert the key.
■■■■■■■ (7)	Throttle trip. The throttle control lever may have been depressed while inserting the key.	Contact your authorized Pride Provider for assistance.
■■■■■■■■ (8)	The scooter's motor is disconnected.	Contact your authorized Pride Provider for assistance.
■■■■■■■■■ (9)	Possible controller trip. You may be attempting to install the battery while the key is inserted or the motor controllermay be in overheat protective mode.	Shut down your scooter for a minimum of several minutes to allow the controller to cool. Or, try reinserting the key into the key switch.

What if all the systems on my scooter seem to be "dead"?

- Make certain that the key is in the "on" position.
- Check that the batteries are fully charged. See IV. "Batteries and Charging."
- Push in the main circuit breaker reset button. See III. "Your Scooter"
- Make certain that both battery harnesses are firmly connected to the electronics module and to the battery terminals. See VII. "Disassembly and Assembly."
- Make sure that the front-to-rear harness is firmly connected to the electronics module. See VII. "Disassembly and Assembly."
- Check the fuses. See IX. "Care and Maintenance" for fuse replacement.
- Be sure the power down timer feature has not been activated. See V. "Operation."

VIII. BASIC TROUBLESHOOTING

What if the motor runs but my scooter does not move?

- With the key turned to the "on" position, check the status LED. If the LED flashes three times, pauses briefly, then flashes two times, this is the manual freewheel lever code meaning your scooter is in freewheel mode.
- When the manual freewheel lever is pulled up, the brakes are disengaged and all power to the transaxle is cut.
- Push down the manual freewheel lever to restore normal operation to your scooter. See III. "Your Scooter."

What if the main circuit breaker repeatedly trips?

- Charge the scooter's batteries more frequently. See IV. "Batteries and Charging."
- If the problem continues, have both of your scooter's batteries load tested by your authorized Pride Provider.
- You may also perform the load test yourself. Battery load testers are available at most automotive parts stores.
- Follow the directions supplied with the load tester.
- See IV. "Batteries and Charging" for information about your scooter's battery type.

What if the battery condition meter dips way down and the motor surges or hesitates when I press my scooter's throttle control lever?

- Fully charge your scooter's batteries. See IV. "Batteries and Charging."
- Have your authorized Pride Provider load test each battery.
- Or, see the previous troubleshooting question for load testing the batteries yourself.

If you experience any problems with your scooter that you are not able to solve, immediately contact your authorized Pride Provider for information, maintenance, and service.

IX. CARE AND MAINTENANCE

Your scooter requires a minimal amount of care and maintenance. If you do not feel confident in your ability to perform the maintenance listed below, you may schedule inspection and maintenance at your authorized Pride Provider. The following areas require periodic inspection and/or care and maintenance.

TIRE PRESSURE

- If equipped with pneumatic tires, always maintain the psi/bar/kPa air pressure rating indicated on each tire.

WARNING! It is critically important that the psi/bar/kPa air pressure rating be maintained in pneumatic tires at all times. Do not underinflate or overinflate your tires. Low pressure may result in loss of control and overinflated tires may burst. Failure to maintain the psi/bar/kPa air pressure rating indicated on pneumatic tires at all times may result in tire and/or wheel failure.

- Regularly inspect your scooter's tires for signs of wear.

EXTERIOR SURFACES

Bumpers, tires, and trim can benefit from an occasional application of rubber or vinyl conditioner.

WARNING! Do not use a rubber or vinyl conditioner on the scooter's vinyl seat, floorboard, or tire tread, as they will become dangerously slippery.

CLEANING AND DISINFECTION

- Use a damp cloth and mild, non-abrasive cleanser to clean the plastic and metal parts of your scooter. Avoid using products that may scratch the surface of your scooter.
- If necessary, clean your product with an approved disinfectant. Make sure the disinfectant is safe for use on your product before application.

WARNING! Follow all safety instructions for the proper use of the disinfectant and/or cleaning agent before applying it to your product. Failure to comply may result in skin irritation or premature deterioration of upholstery and/or scooter finishes.

BATTERY TERMINAL CONNECTIONS

- Make certain that the terminal connections remain tight and uncorroded.
- The batteries must sit flat in the battery wells.
- The battery terminals should face the rear of the scooter.

AXLE BEARINGS AND THE MOTOR/TRANSAXLE ASSEMBLY

These items are all prelubricated, sealed, and require no subsequent lubrication.

MOTOR BRUSHES

The motor brushes are housed inside of the motor transaxle/assembly. They should be inspected periodically for wear by your authorized Pride Provider.

CONSOLE, CHARGER AND REAR ELECTRONICS

- Keep these areas away from moisture.
- Before operating your scooter, allow any of these areas to dry thoroughly if they have been exposed to moisture.

WHEEL REPLACEMENT

If your scooter is equipped with pneumatic tires and you have a flat tire, you can have the tube replaced. If your scooter is equipped with a solid tire insert, either the solid insert or the entire wheel must be replaced depending on the model. Contact your authorized Pride Provider for information regarding replacement wheels for your scooter.

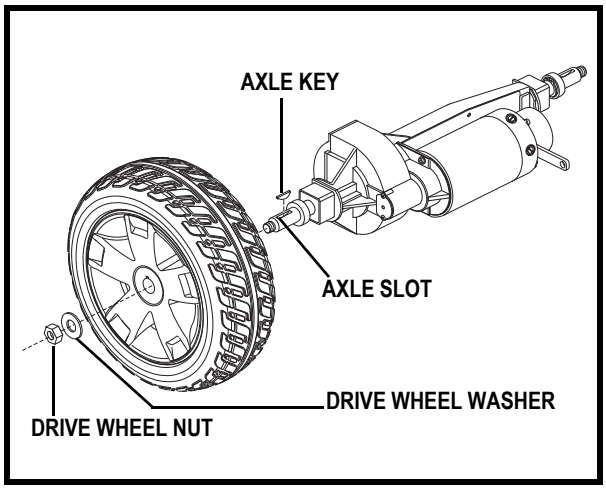

Figure 26. Drive Wheel Removal

WARNING! Wheels on your scooter should only be serviced/replaced by an authorized Pride Provider or qualified technician.

WARNING! Be sure that the key is removed from the key switch and the scooter is not in freewheel mode before performing this procedure.

WARNING! When changing a tire, remove only the center lug nut, then remove the wheel. If any further disassembly is required, deflate the tire completely or it may explode.

Follow these easy steps for a quick and safe repair of solid tires:

1. Remove the key from the key switch.
2. Elevate the side of the scooter of which you are removing the tire. Place wooden blocks under the frame to elevate the scooter.
3. Remove the drive wheel nut and washer from the axle. **See figure 26**.
4. Pull the wheel off the axle.
5. Slide the new wheel back onto the axle. Make sure that the axle key is in the axle slot. **See figure 26.**

WARNING! Failure to ensure that the axle key is properly installed into the axle slot when mounting the wheel can result in electronic brake failure, personal injury, and/or product damage.

6. Reinstall the drive wheel nut and washer onto the axle and tighten.

WARNING! Make sure both the nut and washer are reinstalled and tightened properly.

7. Remove the blocks from beneath the scooter.

WIRING HARNESSES

- Regularly check all wiring connections.
- Regularly check all wiring insulation, including the charger power cord, for wear or damage.
- Have your authorized Pride Provider repair or replace any damaged connector, connection, or insulation that you find before using your scooter again.

PROHIBITED! Even though the scooter has passed the necessary testing requirements for ingress of liquids, you should keep electrical connections away from sources of dampness, including direct exposure to water or bodily fluids and incontinence. Check electrical components frequently for signs of corrosion and replace as necessary.

ABS PLASTIC SHROUDS

- The front tiller shroud, front shroud, and the rear shroud are formed from durable ABS plastic and are coated with an advanced formula urethane paint.
- A light application of car wax will help the shrouds retain their high gloss.

LIGHT BULB REPLACEMENT

The scooter's light bulbs are easily replacable. Do not use regular automotive-type 12-volt light bulbs; your scooter is equipped with a 24-volt electrical system. Replacement light bulbs can be purchased from your authorized Pride Provider.

NOTE: Use only 24-volt light bulbs.

1. Remove the light cover.
2. Gently remove the bulb by pulling it straight out.
3. Insert a new bulb of the same wattage.
4. Replace the light cover.

FUSE REPLACEMENT

In the event a fuse should cease to work:

1. Remove the fuse by pulling it out of its slot.
2. Examine the fuse to be sure it is blown. **See figures 27 and 28.**
3. Insert a new fuse of the proper rating.

WARNING! The replacement fuse must exactly match the rating of the fuse being replaced. Failure to use properly rated fuses may cause damage to the electrical system.

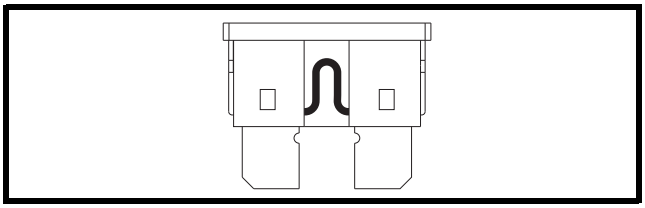

Figure 27. Working Fuse

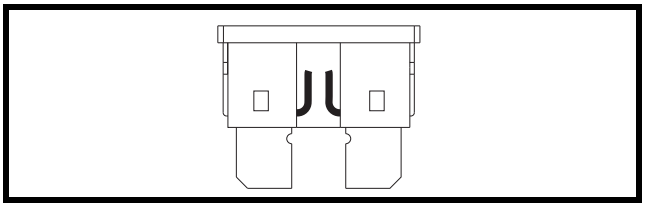

Figure 28. Blown Fuse (Replace)

IX. CARE AND MAINTENANCE

NYLON LOCK NUT REPLACEMENT

Any nylon insert lock nut removed during the periodic maintenance, assembly, or disassembly of the scooter must be replaced with a new nut. Nylon insert lock nuts should not be reused as it may cause damage to the nylon insert, resulting in a less secure fit. Replacement nylon insert lock nuts are available at local hardware stores or through your authorized Pride Provider.

STORING YOUR SCOOTER

If you plan on not using your scooter for an extended period of time, it is best to:

- Fully charge its batteries prior to storage.
- Disconnect the batteries from the scooter.
- Store your scooter in a warm, dry environment.
- Avoid storing your scooter where it will be exposed to temperature extremes.

WARNING! Always protect batteries from freezing temperatures and never charge a frozen battery. Charging a frozen battery may result in damage to the battery.

Batteries that are regularly and deeply discharged, infrequently charged, stored in extreme temperatures, or stored without a full charge may be permanently damaged, causing unreliable performance and limited service life. It is recommended that you charge the scooter batteries periodically throughout periods of prolonged storage to ensure proper performance.

You may wish to place several boards under the frame of your scooter to raise it off of the ground during periods of prolonged storage. This takes the weight off the tires and reduces the possibility of flat spots developing on the areas of the tires contacting the ground.

DISPOSAL OF YOUR SCOOTER

Your scooter must be disposed of according to applicable local and national statutory regulations. Contact your local waste disposal agency or authorized Pride Provider for information on proper disposal of packaging, metal frame components, plastic components, electronics, batteries, neoprene, silicone, and polyurethane materials.

X. WARRANTY

THREE-YEAR LIMITED WARRANTY

For three (3) years from the date of purchase, Pride will repair or replace at our option to the original purchaser, free of charge, any of the following parts found upon examination by an authorized representative of Pride to be defective in material and/or workmanship:

Structural Frame Components, Including:

- Main Frame
- Fork
- Seat Post
- Tiller Frame

THREE-YEAR PRORATA WARRANTY

Three-year prorata drivetrain warranty, including:

- Transaxle
- Motor Brake (electronic function ONLY)
- Brake

These components will be prorated on the following schedule:

- First year: 100% replacement of parts cost
- Second year: 67% replacement of parts cost
- Third year: 50% replacement of parts cost

NOTE: If there is an increase in the operational noise level in the transaxle, the warranty does not apply. An increase in operational noise level usually occurs due to abusive and excessive strain on the scooter.

ONE-YEAR LIMITED WARRANTY

For one (1) year from the date of purchase, Pride will repair or replace at our option to the original purchaser, free of charge, any of the following parts found upon examination by an authorized representative of Pride to be defective in material and/or workmanship:

- Bearings
- Bushings
- Rubber Components
- Plastic components (except body)

Also, electronic assemblies including:

- Electronic Controllers
- Chargers
- Harnesses
- Any other electrical subassembly

SIX-MONTH WARRANTY

The battery is covered by a separate (6) month warranty, provided by the battery manufacturer. The batteries are not warranted by Pride.

RECONDITIONED UNITS WARRANTY

All reconditioned units are covered by a (6) month warranty from Pride effective from the date of purchase.

X. WARRANTY

WARRANTY EXCLUSIONS

This warranty does not extend to those items which may require replacement due to normal wear and tear.

- ABS Plastic shrouds
- Brake Pads
- Motor brushes
- Tires and tubes
- Upholstery and seating
- Fuses/Bulbs

- Circumstances beyond the control of Pride
- Labor, service calls, shipping, and other charges incurred for repair of the product, unless specifically authorized, IN ADVANCE, by Pride Mobility Products Corporation
- Repairs and/or modifications made to any part without specific consent from Pride

Exclusions also include components with damage caused by:

- Contamination
- Abuse, misuse, accident, or negligence
- Battery fluid spillage or leakage
- Commercial use, or use other than normal
- Improper operation, maintenance, or storage

NOTE: Gradual deterioration in performance because the battery has been left in a discharged state, left in cold conditions for an extended period of time, or worn out through heavy use is not covered.

SERVICE CHECKS AND WARRANTY SERVICE

Warranty service must be performed by an authorized Pride Provider. Do not return faulty parts to Pride without prior written authorization. All transportation costs and shipping damage incurred while submitting parts for repair or replacement are the responsibility of the purchaser. Please contact your authorized Pride Provider for information on the current cost associated with a service visit.

There is no other express warranty.

IMPLIED WARRANTIES

Implied warranties, including those of merchantability and fitness for a particular purpose, are limited to one (1) year from the date of original purchase and to the extent permitted by law. Any and all other implied warranties are excluded. This is the exclusive remedy. Liabilities for consequential damages under any and all warranties are excluded.

Some states do not allow limitations on how long an implied warranty lasts or do not allow the exclusion or limitation of incidental or consequential damages. So, the above limitation or exclusion may not apply to you.

APPENDIX I - SPECIFICATIONS

MAXIMA SPECIFICATIONS	
Model Number	3-wheel: SC900 4-wheel: SC940
Overall Length[3]	3-wheel: 46.3 in. (118 cm) 4-wheel: 47 in. (119.4 cm)
Overall Width[3]	25.5 in. (64.8 cm) at wheels
Total Weight Without Batteries[3]	3-wheel: 171 lbs. (77.5 kg) 4-wheel: 176 lbs. (80 kg)
Heaviest Piece When Disassembled[3]	Rear Frame: 70 lbs. (32 kg)
Turning Radius[3]	3-wheel: 52 in. (132.1 cm) 4-wheel: 54 in. (137.2 cm)
Speed (maximum)[1]	Variable up to 5.6 mph (9 km/h)
Range Per Charge[1, 2]	With 55 Ah batteries: 3-wheel - Up to 18.09 miles (29.11 km) 4-wheel - Up to 16 miles (25.75 km) With U-1 batteries: Up to 9.6 miles (15.45 km)[6]
Ground Clearance[3]	3.2 in. (8.1 cm)
Weight Capacity	500 lbs. (227 kg)
Standard Seating	Type: DX contour medium black Dimensions: 22 in. (56 cm) width x 18 in. (46 cm) depth x 18.5 in. (47 cm) height Material: Grey, Beige or Black Vinyl, or Grey Fabric
Standard Seat Weight[3]	41 lbs. (19 kg)
Drive System	Rear-wheel drive, sealed transaxle with 24-volt DC motor
Dual Braking System	Regenerative and electromechanical
Tires	Type: Solid (PU Foam) Front: 3 in. x 10 in. (7.5 cm x 25 cm) Rear: 4 in. x 10 in. (10 cm x 25 cm)
Battery Requirements	Type: Two 12-volt deep-cycle Size: (U-1) 31-36 Ah; (NF-22) 55 Ah
Battery Weight[3, 4, 5]	U-1: 24.5 lbs. (11 kg) each NF-22: 38 lbs. (17 kg) each
Battery Charger	Off-board

1 Varies with user weight, terrain type, battery amp-hour (Ah), battery charge, battery condition, and tire condition. This specification can be subject to a variance of +10%, -5%.

2 Tested in accordance with ANSI/RESNA, WC Vol 2, Section 4 & ISO 7176-4 standards. Results derived from theoretical calculation based on battery specifications and drive system performance. Test conducted at maximum weight capacity.

3 Due to manufacturing tolerances and continual product improvement, this specification can be subject to a variance of (+ or -) 3%.

4 AGM or Gel-Cell type required. See IV. “Batteries and Charging.”

5 Battery weight may vary based on battery manufacturer.

6 Test conducted on SC900 at maximum weight capacity.

NOTE: This product conforms to all applicable ANSI-RESNA testing requirements and ISO 7176 series EN12184 standards. All specifications subject to change without notice.

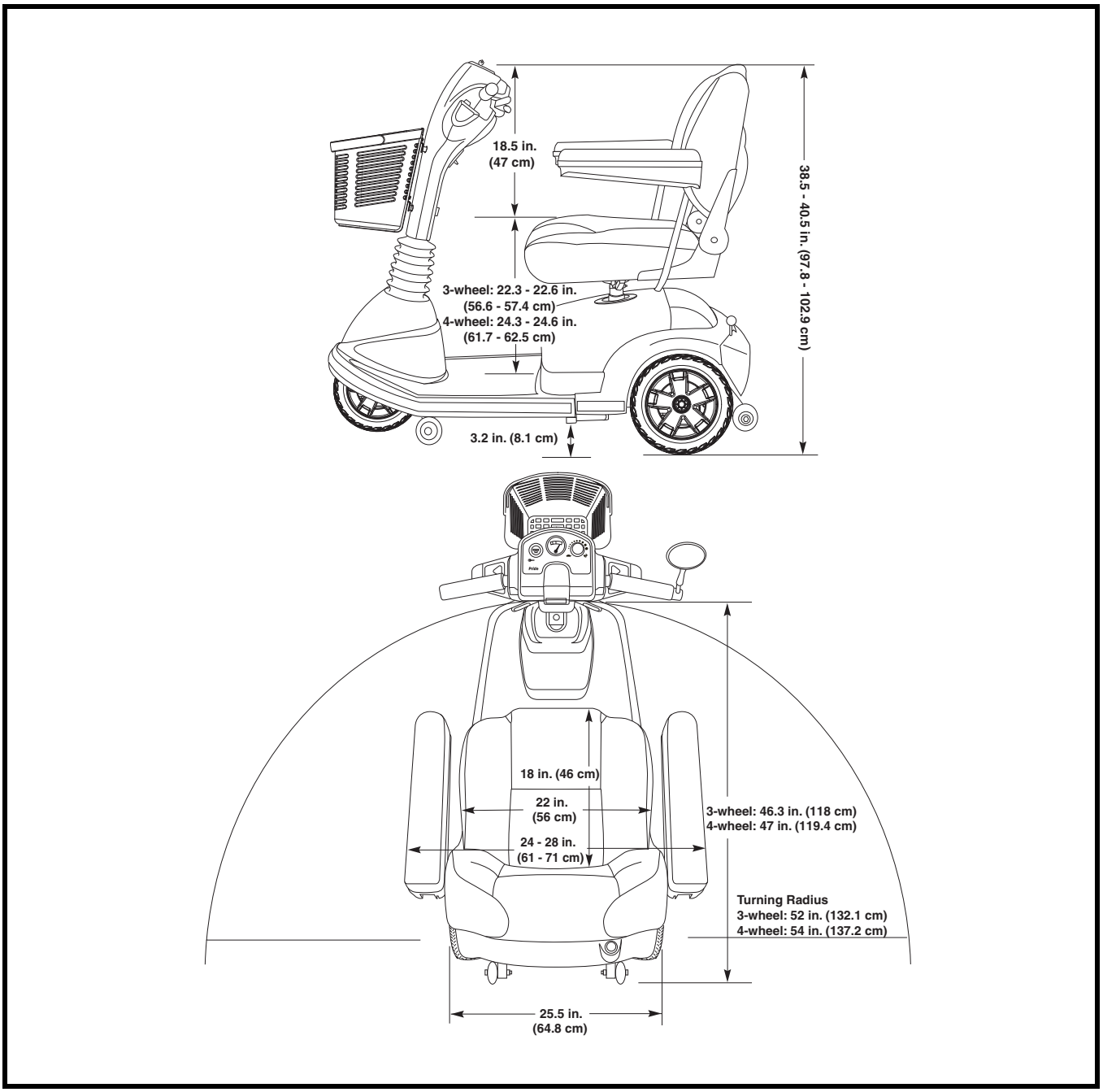

Figure 29. Scooter Dimensions

NOTES

Pride®
Mobility Products Corp.

182 Susquehanna Avenue
Exeter, PA 18643

www.pridemobility.com

INFMANU2058