Delta 1000

Ultra Light Plus, Full Electric Bed

Item # 15033

Owner's Assembly And Operating Manual

drive™

Assembly Instructions

1. Confirm that all parts are present.
   A. Foot Spring
   B. Head Spring
   C. Head Board
   D. Foot Board
   E. Hi/Low Shaft
   F. Locking Pins
   G. Motor
   H. Hand Crank (attached to foot board for shipping)
   I. Casters (4) - 2 locking, 2 non-locking
   J. Spring Clips (2)
   K. Hand Pendant
   L. Full Electric Motor

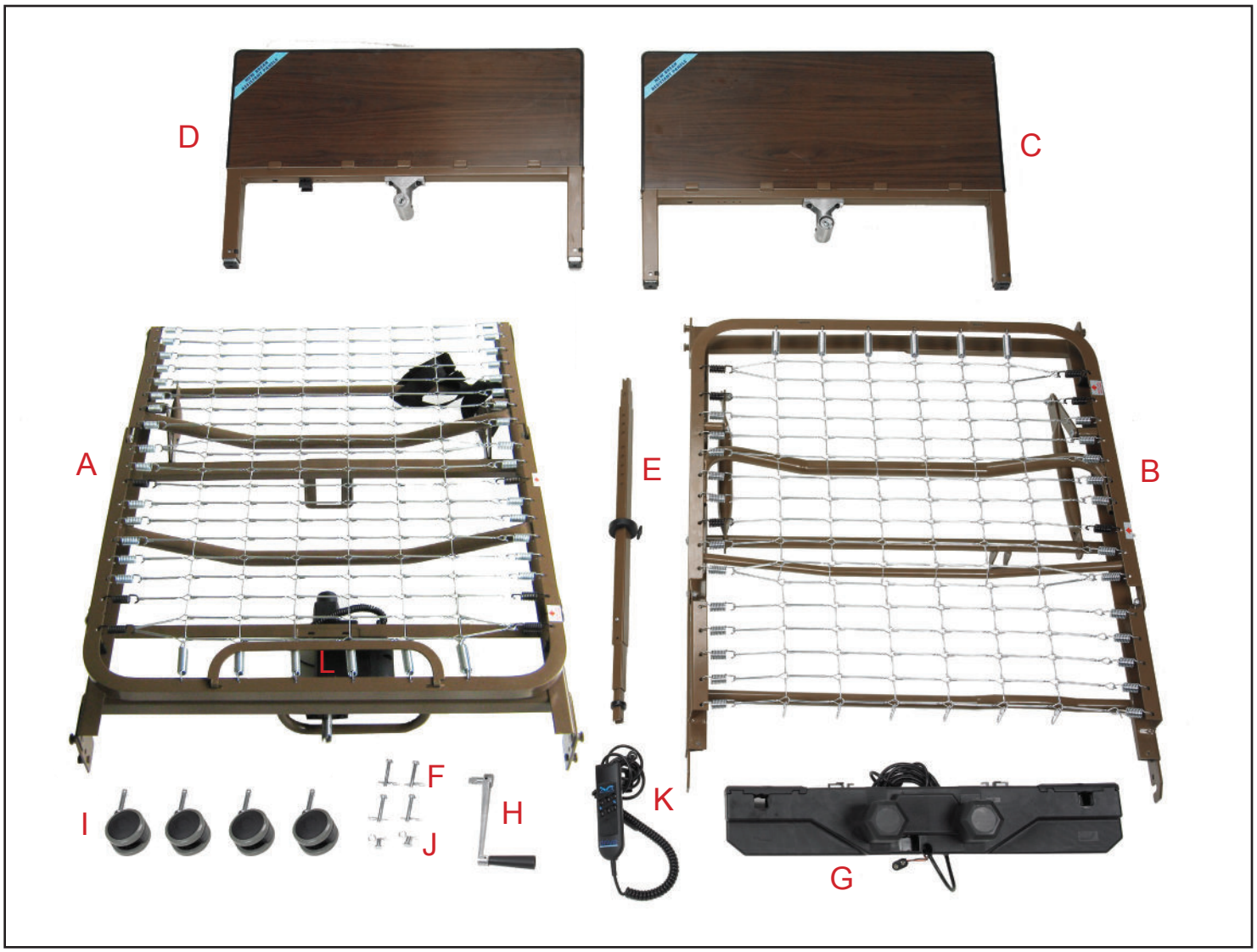

Assembly Instructions Cont.

2. Connect the head spring by aligning with foot spring and swinging both ends away from each other.

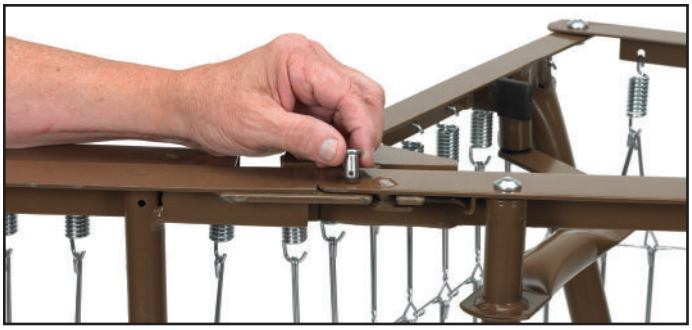

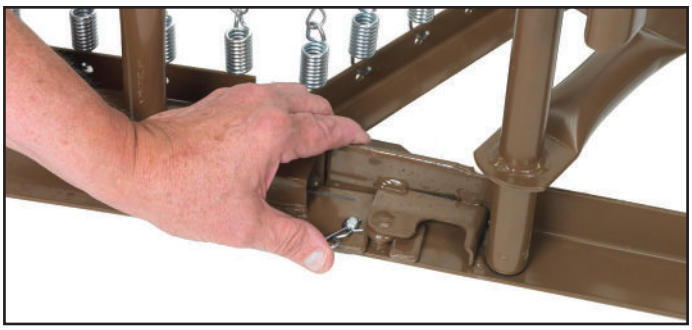

3. Optional: Insert lock pin through connected sleep surface and secure with spring clip.

Assembly Instructions Cont.

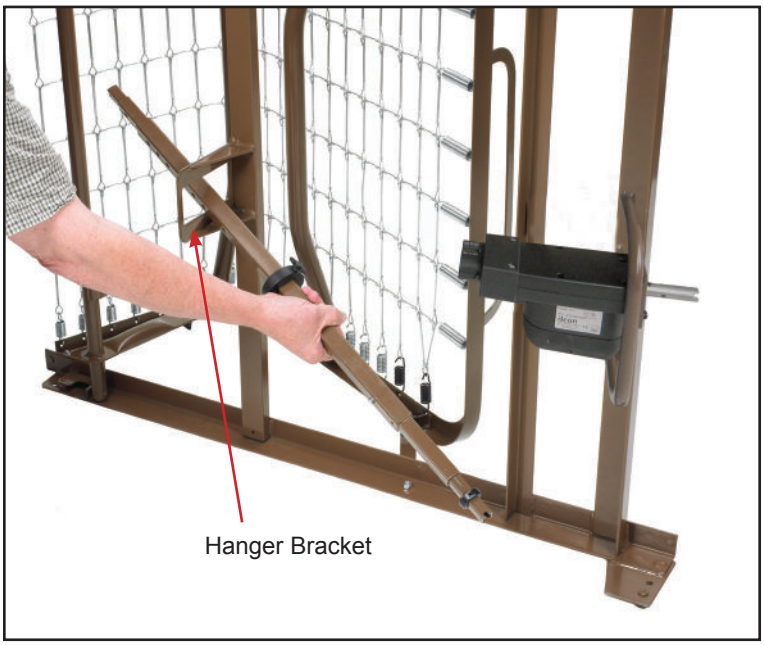

4. Place the foot spring standing up on the floor on its side. Slide Hi/Low shaft through hanger bracket.

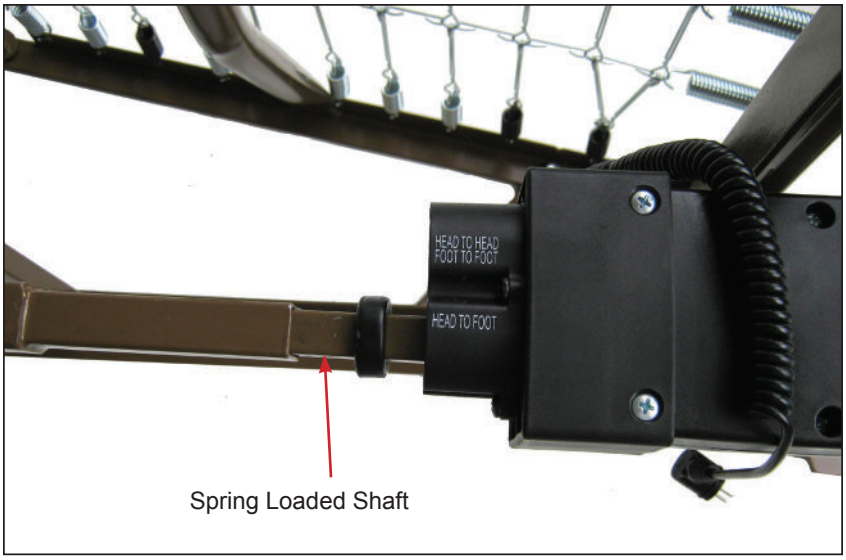

5. Install Hi/Low shaft to the Hi/Low motor at the foot section of the bed by inserting the spring loaded side of the shaft to the bottom receptacle as shown.

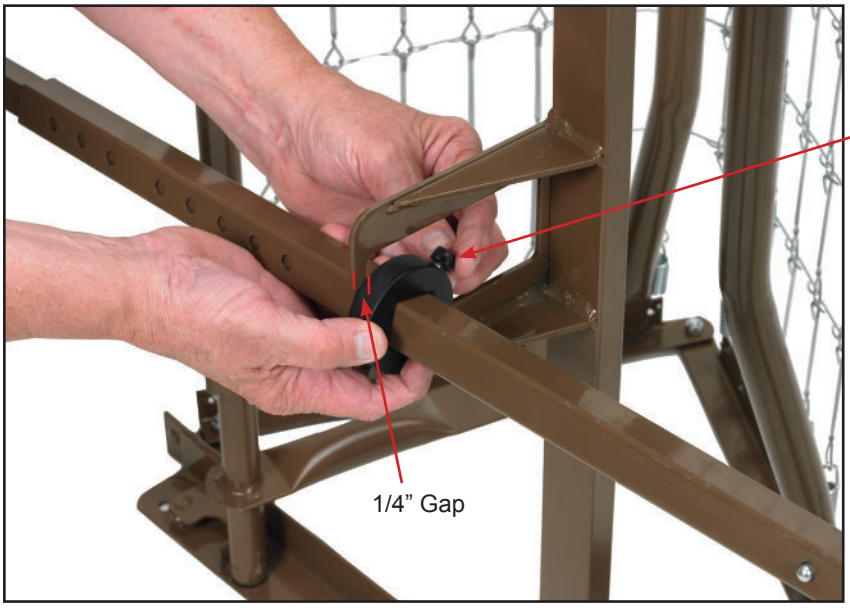

6. Slide lock collar 1/4” from the foot side of the hanger bracket as shown. Tighten thumb screw.

Assembly Instructions Cont.

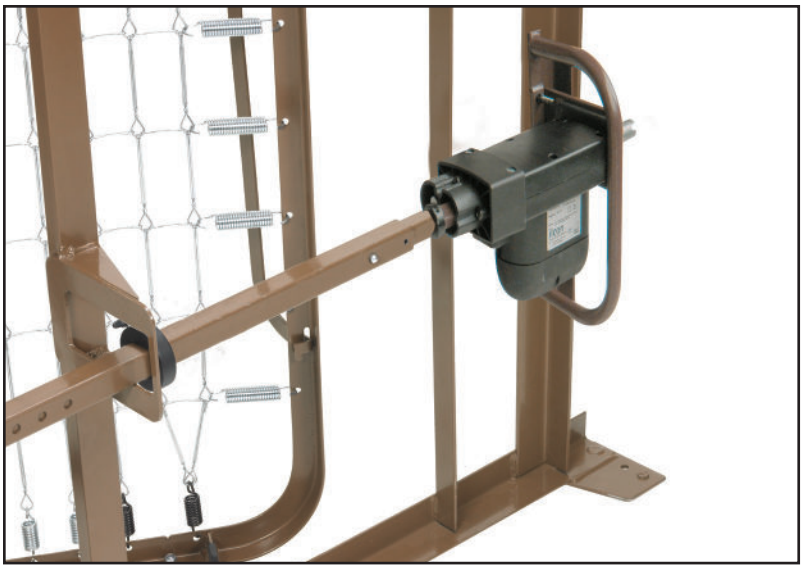

7. Hi/Low shaft connected to Hi/Low motor.

8. Connect head section and foot section by squeezing together and attaching with spring links. Pull up the head section and foot section to release tension between the springs.

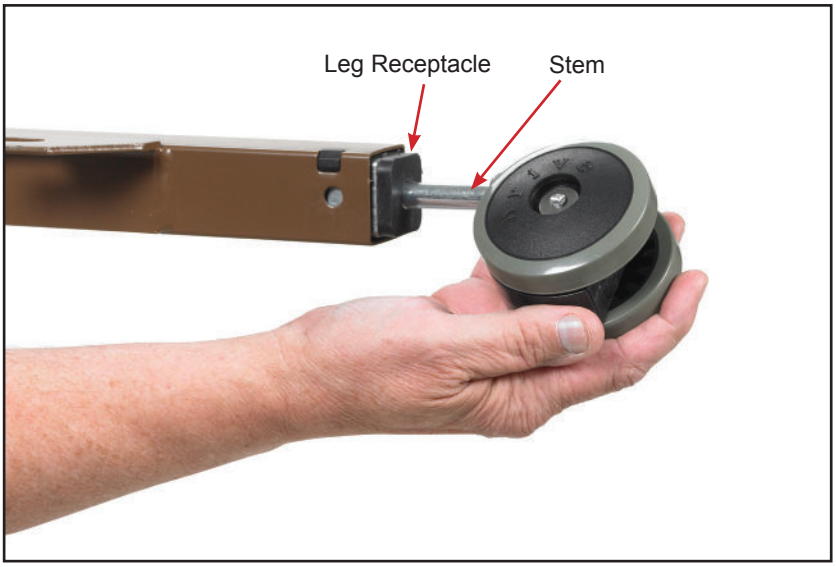

9. Install the casters by inserting the stem of the caster into the leg receptacle. It is recommended to install 1 locking caster and 1 non-locking caster on each bed end. The locking casters should be installed diagonally from each other.

10. With bed on side extend the shaft until it reaches the full length of bed.

a. NOTE: The shaft adjustment holes are marked to indicate the style (semi/full) of bed the shaft is being installed on.

11. Attach the head board and foot board as shown.

a. NOTE: The head section is higher than the foot section. However, they are interchangeable with each other, with all other Drive and other manufacturers head and foot boards.

12. Install the head end of the shaft as shown.

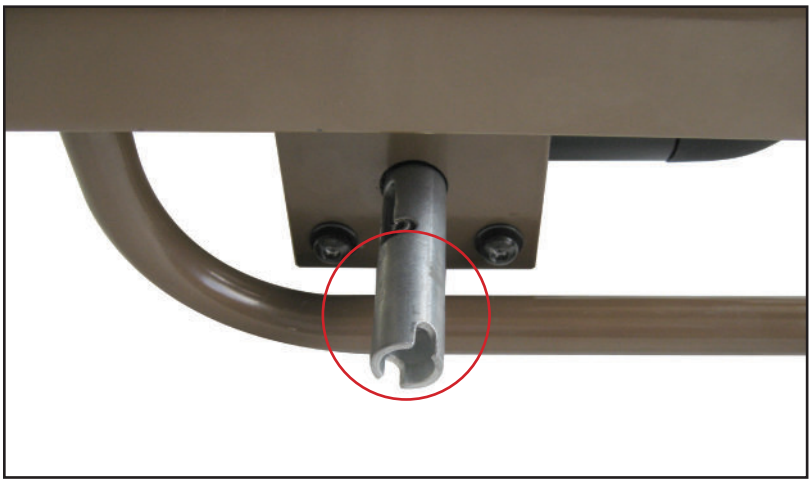

13. Release the spring loaded shaft on the hi/low motor and insert the shaft into the gear box on the footboard.

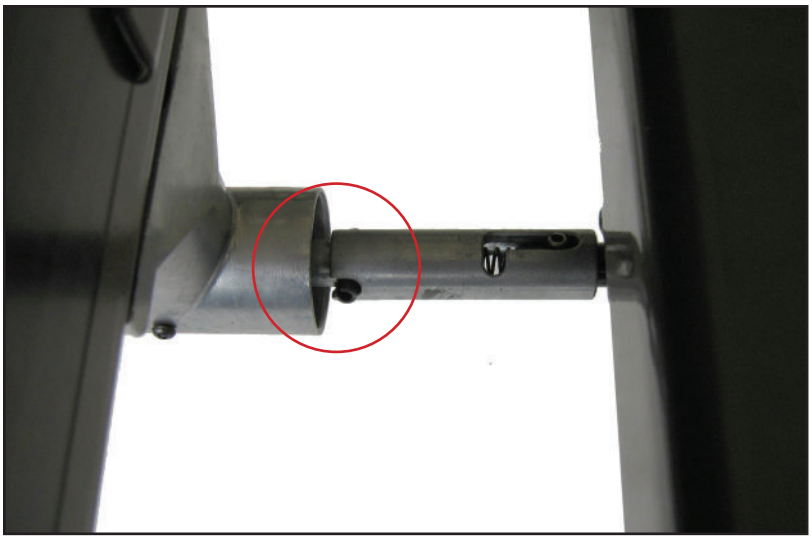

14. Make sure the slot on the spring loaded shaft engages the roll pin on the gear box.

Motor Installation

NOTE: Before installing motor, plug hand pendant and Hi/Low motor cable into motor as shown

14. Connect the 9V battery (sold separately) to the battery clip on the motor. It is stored in the recess under the motor cover. With this battery installed, the motor can be operated in the event of a power failure.

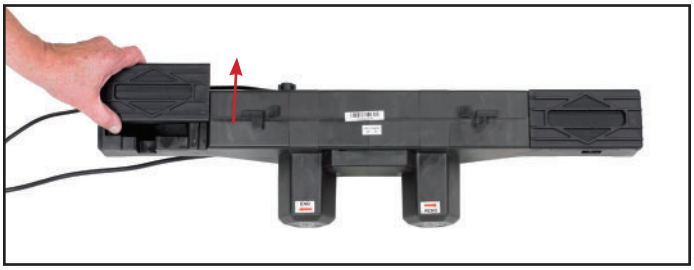

15. To install motor, remove locking caps on top of the motor.

Motor Installation Cont.

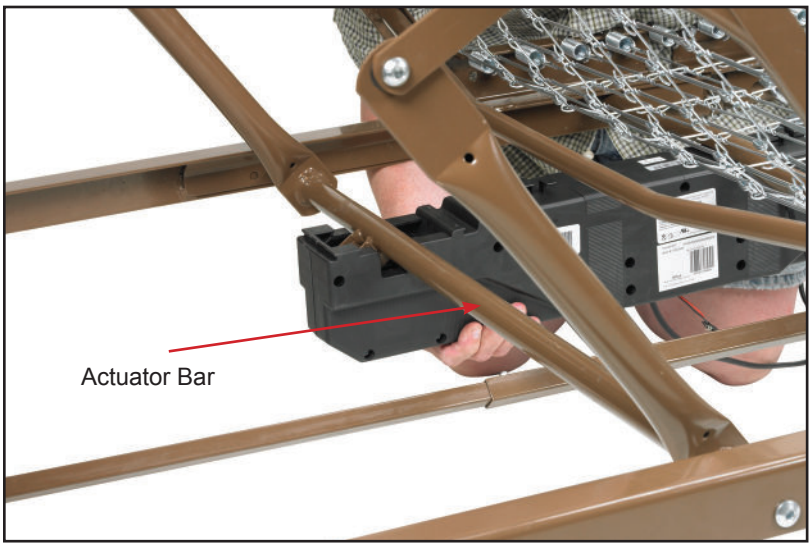

16. Align the motor with the actuator bar and lift the head spring to the highest position. The motor will automatically be pulled towards the bed and lock onto the accuator. Repeat for foot section.

17. After the motor is installed, slide locking covers back on motor.

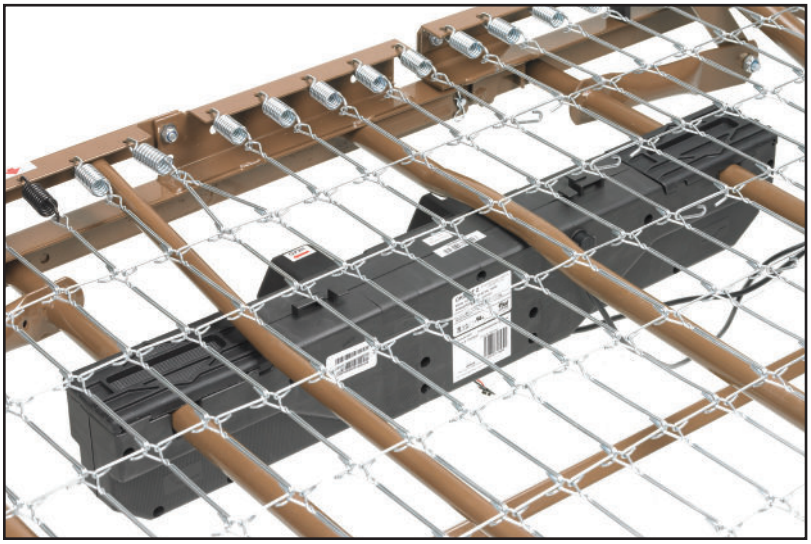

Bed Rail Installation

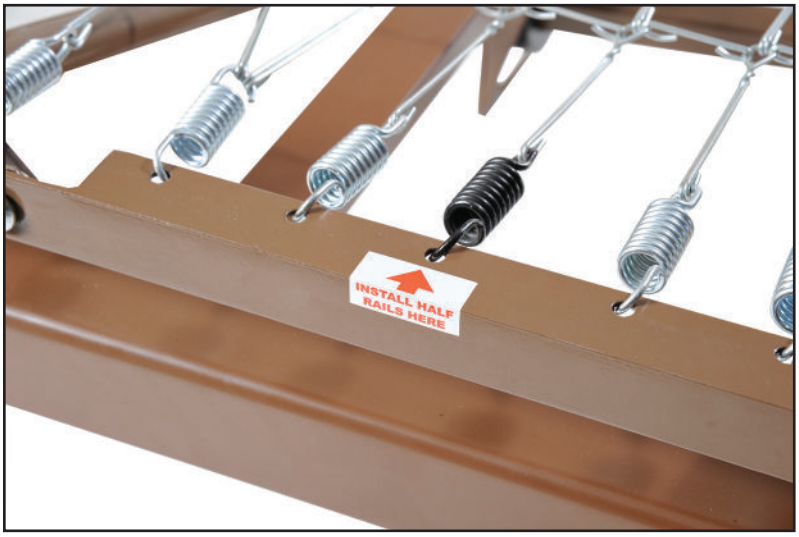

18. Attaching Bed Rails

a. Half rails

- The head section features labels on the frame marked, “Attach Half Rails Here” and black springs for proper placement.

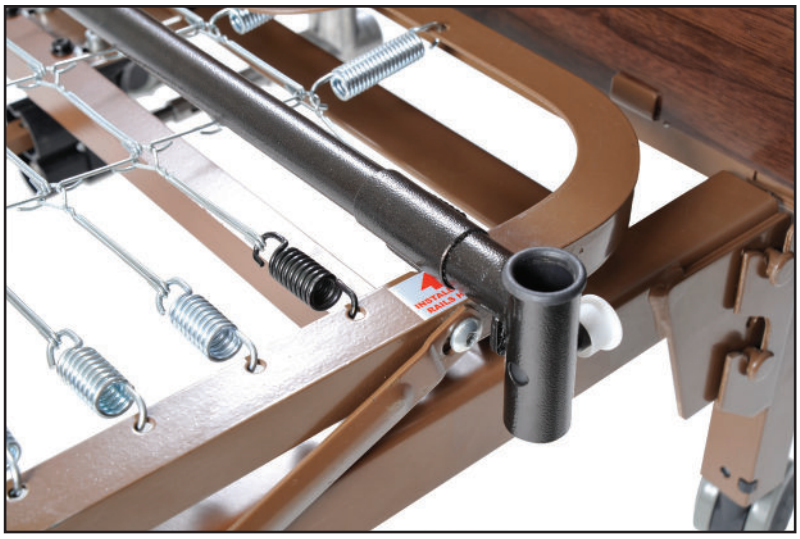

b. Full Rails

- The foot and head section have color coded springs, labels and notches in the frame.
- Install the cross brace between the black springs for proper rail placement.

Optional Fixed Height Adjustment

19. Optional fixed height adjustment with lock pins

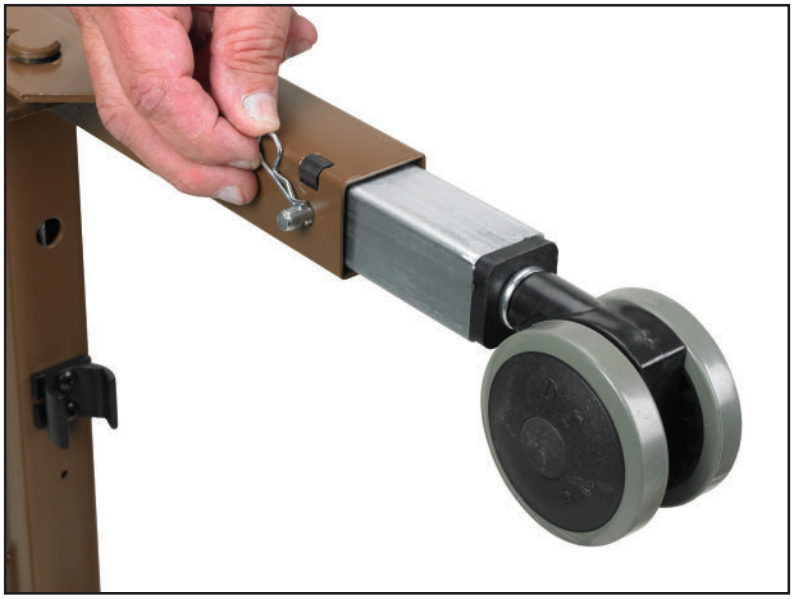

a. The four large pins are used if the height of the bed is to be locked at a set height. Set the height of the bed so that the hole in the leg is aligned with the hole in the bed end outer leg. Insert the pin through each of the four legs and install the spring clip on each.

20. Before a mattress is laid on the bed, flip up the mattress guard to reduce the movement of the mattress.

Storage

21. Shown on Bed Storage Transporter with motor attached with storage strap Drive model # 15060.

Maintenance & Safety Checks

Drive recommends the following maintenance and cleaning procedures be conducted between users.

ELECTRONICS

- Check all controls to make sure all functions work properly.
  - Foot control
  - Head control
  - Hi/Lo
- Check all cables for damaged or frayed wires.
  - Power cord
  - Pendant cord
- Check to make sure all plugs are fully inserted or attached.
- Check 9V battery on motor and replace annually.

BED FRAME & SLEEPING SURFACE

- Visually check all welds.
  - Head section
  - Foot section
  - Main Frame
- Check joints between sleeping surface sections for loose fasteners.

CLEANING

- The metal parts of the bed are covered with a powder coating. Clean all coated parts with mild detergent and warm water. Periodically raise head and feet sections of the bed and remove dust from frame. Also, periodically remove mattress and clean mattress deck.

LUBRICATION & MECHANICAL

- Lightly grease all actuator screw threads with white lithium grease.
- Lubricate all caster roller and swivel bearings with light machine oil.
- Check all bolts and tighten as needed.

WARRANTY

- Lifetime warranty on welds.
- 5 year warranty on frame.
- 5 year warranty on motor.
- 1 year warranty on all other parts and components.

During the warranty period, defective items will be repaired or replaced at Drive's option at no charge.

Specifications

DECK HEIGHT

BED HEIGHT (HIGH POSITION)

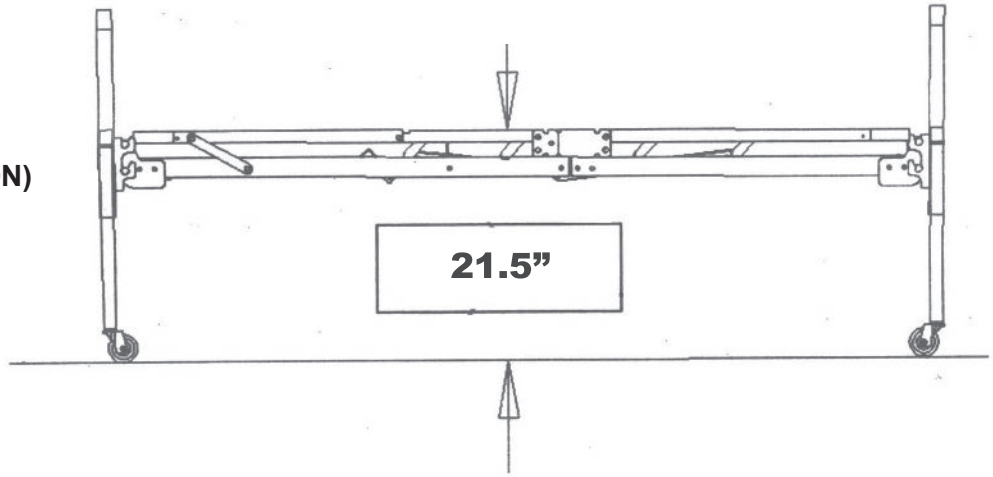

BED HEIGHT (LOW POSITION) LENGTH

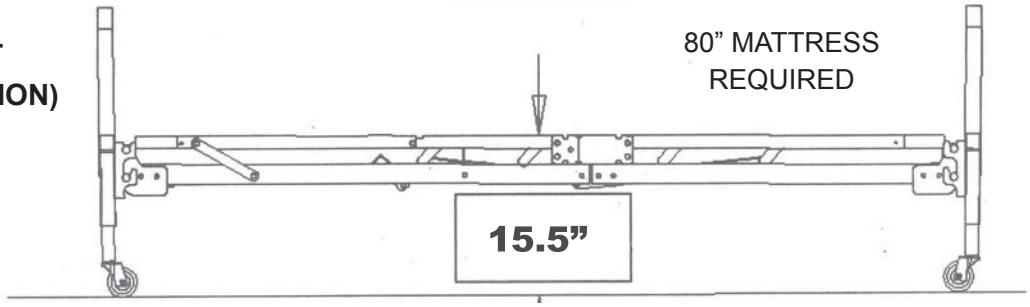

DECK WIDTH

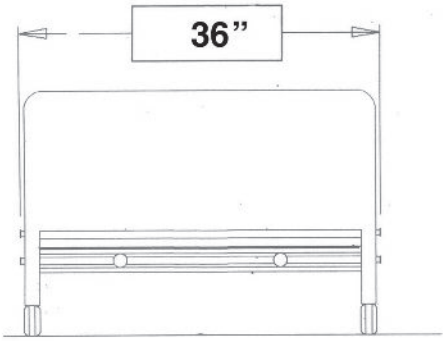

ELECTICAL

- Motor is UL approved.

WEIGHT

- Normal operating conditions: 450 lbs evenly distributed.

CONSTRUCTION

- Frame: 11ga (.120) hot rolled steel (rolled formed).
- Sleeping surface: Zine plated steel wire and coils.

FINISH

- Durable Powder Coating.

WARNINGS

GENERAL WARNINGS

DO NOT use this product or any available optional equipment without first completely reading and understanding these instructions and any additional instructional material such as owner's manuals, service manuals or instruction sheets supplied with this product or optional equipment. If you are unable to understand the warnings, cautions or instructions, contact a healthcare professional, dealer or technical personnel before attempting to use this equipment - otherwise, injury or damage may occur.

Read all the instructions before using the bed.

Refer to the owner's manuals for beds and rails for additional product and safety information.
After any adjustments, repair or service and before use, make sure all attaching hardware is tightened securely.

After the bed has been assembled, always test to make sure that all sections of the bed are properly and securely in place before using.

ALWAYS use caster locks except when moving the bed.

Body weight should be evenly distributed over the surface of the bed. **DO NOT** lay, sit or lean in such a way that your entire body weight is placed only on raised head or foot sections of the bed. This includes when assisting the user in repositioning or transferring in or out of bed.

Check all parts for shipping damage and test before using. In case of damage, **DO NOT** use. Contact a qualified technician for further instruction.

Close supervision is necessary when this bed is used by or near children or people with disabilities.

DO NOT let any individual underneath the bed or in between the raised bed frame components at anytime.

DO NOT permit more than one person on/in the bed at any time.

DO NOT use outdoors.

DO NOT use this product or any available optional equipment without first completely reading ¬-and understanding these instructions and any additional instructional material such as owner's manuals, service manuals or instruction sheets supplied with this product or optional equipment. If you are unable to understand the warnings, cautions or instructions, contact a healthcare professional, dealer or technical personnel before attempting to use this equipment - otherwise, injury or damage may occur.

For Dealers Only - Set-up and Assembly Instructions are in the rear of this manual. These procedures must be performed by a qualified technicians only.

WARNINGS

The March 2006 version of the FDA's bed safety guidelines are published by Hospital Bed Safety Workgroup. The latest revision of this document is available at http://www.fda.gov.

If the unit is not working properly, call a qualified technician to examine the unit and repair it.

Drive Medical products are specifically designed and manufactured for use in conjunction with Drive Medical accessories. Accessories designed by other manufacturers have not been tested by Drive Medical and are not recommended for use with Drive Medical products.

Keep all moving parts, including the main frame, mattress deck (head and foot springs/sections) and all drive shafts free of obstruction (i.e. blankets/sheets, heating blankets/pads, tubing, wiring, etc. and other types of products using electric cords which may get tangled around the bed, side rails or legs) during operation of the bed.

Keep the product a minimum of 12 inches away from any direct heat source.

Make sure head and foot springs/sections are connected securely to the universal bed ends before use.

Physically challenged individuals who cannot prevent themselves from rolling/climbing out of the this bed may require alternative safe means of restraint.

Procedures other than those described in this manual must be performed by a qualified technician.
Risk of injury to persons - **DO NOT** place video equipment such as televisions or computer monitors on bed.

NEVER allow patients to use trapeze or traction units as a total individual weight support.

Trapeze units are to be used only for assisting the patient in repositioning or transferring into or out of bed.

Trapeze units must be positioned on a universal bed end as near as possible to the center point of the bed end.

The bed is not designed to be used as a patient transport. When transporting a patient, use an approved patient transport. Otherwise, injury or damage may result.

The bed may be equipped with locking casters. When transferring into or out of the bed, always lock the locking caster(s). Inspect for correct locking action on caster locks before using bed. Even with casters properly locked, some flooring surfaces such as tile or wood, will allow the bed to move under some conditions. Use on surfaces such as these must be evaluated by the care provider.

The initial set up of this bed must be performed by a qualified technician.

WARNINGS

The total weight limit of the Drive Medical 36-inch (91.4 cm) wide Manual/Electric bed (including accessories, mattress, occupant and any other person/object positioned on the bed) is 450 pounds (204 kg.); 350 pounds (158 kg) patient weight.

Use this bed only for its intended use as described in these instructions. **DO NOT** use attachments not recommended by the manufacturer.

After raising/lowering the head/foot end of the bed, check the distance between the bottom of the bed rail and the mattress. If there is excessive distance between the bottom of the bed rail and the mattress in which individuals may become entangled, adjust the height of the bed rail (if applicable), or provide alternative means of patient protection.

Once patient assessment concludes that the patient's condition increases the chance of entrapment, the bed **MUST** be in the flat position when left unattended.

Proper patient assessment and monitoring, and proper maintenance and use of equipment is required to reduce the risk of entrapment. Variations in bed rail dimensions, and mattress thickness, size or density could increase the risk of entrapment. Visit the FDA website at http://www.fda.gov to learn about the risks of entrapment.

Replacement mattresses and bed side rails with dimensions different than the original equipment supplied or specified by the bed frame manufacturer are not interchangeable. Variations in bed side rail design, width and thickness or firmness of the mattress could cause/contribute to entrapment. Use only authorized Drive Medical replacement parts and/or accessories otherwise the warranty is void. Drive Medical will not be responsible for any damage or injury that may result.

To reduce the risk of entrapment make certain that the bed rail cross braces **DO NOT** exceed the width of the mattress. Mattress **MUST** fit bed frame and side rails snugly to reduce the risk of entrapment.

When operating this bed, **ALWAYS** ensure that the individual utilizing the bed is positioned properly within the confines of the bed. **DO NOT** let any extremities protrude over the side or between the bed rails when performing these functions.

Drive Medical recommends that the mattress be centered on the bed frame. Otherwise, individuals may become entangled between the bed rail and the bed frame.

Mattress **MUST** fit bed frame and assist rails snugly to reduce the risk of entrapment.

SAVE THESE INSTRUCTIONS

NOTE: Updated versions of this manual are available on www.Drive Medical.com.

WARNINGS

BED RAIL WARNINGS

Although bed rails are not rated to any specific weight limitation, the bed rails may become deformed or broken if excessive side pressure is exerted on the bed rails. The bed rail is not an assist rail for getting into or out of bed. **DO NOT** use the bed rails as push handles when moving the bed.

Always test to make sure that the side rails are properly and securely in place before using the bed.

DO NOT install the optional bed rails without reading and understanding all of the instructions in the instruction sheet that accompanies the bed rail kit.

DO NOT use the side rails as push handles for moving the bed.

These bed rails are intended to prevent an individual from inadvertently rolling out of bed. **DO NOT** use for restraint purposes.

When used with a manual/electrical bed, the bed rails **DO NOT** fall under any weight limitations. Bed rails can be deformed or broken if excessive side pressure is exerted on the bed rails. These bed rails are used for the purpose of preventing an individual from inadvertently rolling out of bed. The bed rails are **NOT** intended nor may be used for restraint purposes. If an individual is capable of injuring himself/herself, a physician or a healthcare professional should be consulted for alternative means of safe restraint.

ELECTRICAL WARNINGS

A safety feature of this product includes protection against overheating caused by excessive or extended periods of operation. Depending on the duration, this includes multiple or repeated adjustments or the use of multiple functions at one time. To ensure trouble free operation, always allow a slight pause between multiple adjustments and avoid pressing more than one function button at a time. If thermal protection activation should occur, the bed will not respond to pendant commands. Given this situation, release the pendant button and allow the bed unit to sit for several minutes. This will allow the protection function time to reset and restore bed function. Depending on severity of the initial overheating, this could take up to 30 minutes.

Allow a slight pause between adjustments and avoid pressing multiple buttons at the same time. If pendant buttons are depressed too rapidly or multiple buttons are pressed at the same time, the desired feature may not activate. Simply release the pendant button, permit a slight pause and then activate the next operation.

ALWAYS remove manual crank(s) before performing electronic functions. Otherwise, the crank(s) will turn when the motor is on and could cause personal injury or damage to the bed.

Always unplug the bed from the electrical outlet before cleaning.

DO NOT open assemblies such as the motors, pendant, junction boxes or gear boxes. No user serviceable parts are inside. Only qualified technicians are permitted to repair these parts. If unqualified individuals perform any work on these beds, the warranty is void.

WARNINGS

DO NOT place pendant under or between objects. This may unintentionally press the buttons and may cause injury or damage.

Electronic equipment may be influenced by Radio Frequency Interference (RFI). Caution should be exercised with regard to the use of portable communications equipment in the area around such equipment. If RFI causes erratic behavior, unplug the electric bed **IMMEDIATELY**. Leave unplugged while transmission is in progress.

Ensure all cables and cords are routed such that they will not become entangled or pinched. Otherwise damage or injury may result.

If a button on the pendant does not release or sticks, the bed spring will not stop moving.

If a liquid is spilled in or around the electric bed, unplug the electric bed before cleaning. Clean up the spill and allow the electric bed or the area around the electric bed to dry thoroughly before using the electric controls again.

Inspect the covering of the bed's control panel and the patient control panel to assure that the covering is not cracked or damaged.

Keep all electrical cords away from heated or hot surfaces.

Keep the cord away from heated surfaces.

NEVER operate if the unit has a damaged cord or plug. If it is not working properly, call a qualified technician for examination and repair.

NEVER operate this bed if it has a damaged cord or plug, if it is not working properly, if it has been dropped, damaged, or dropped into water. Return the bed to a service center for examination and repair.

On Full Electric beds, the Hi/Lo crank **MUST** be removed before the bed is used. Failure to remove the crank may cause damage or personal injury.

Refer servicing to qualified personnel only. Grounding reliability depends upon a properly grounded wall outlet.

The pendant and power cords must be routed and secured properly to ensure that the cords **DO NOT** become entangled, pinched and/or severed during operation of the electric bed.

Unplug from the outlet before servicing.

Unplug the power cord from its power source before performing any maintenance on the manual/electric bed. **DO NOT** unplug the power cord from the junction box. Damage to cord will result.

WARNINGS

Use caution when disconnecting the pendant. **DO NOT** press pendant buttons.

When bed is not to be used for an extended period, unplug electric bed from the wall outlet.

When using an extension cord, use only a three wire extension cord having at least 16 AWG (American Wire Gauge) wire and the same or higher electrical rating as the device being connected. Use of improper extension cord could result in a risk of fire and electric shock. Three to two prong adapters should not be used. Use of three prong adapters can result in improper grounding and present a shock hazard to the user.

When using nasal or masked type oxygen administering equipment, the oxygen or air tubing **MUST** be routed and secured properly to ensure that the tubing does not become entangled and/or severed during normal operation of the bed.

DO NOT use near explosive gases.

Possible fire hazard when used with oxygen administering equipment other than nasal or masked type.

Use masked or nasal type oxygen administering equipment only in conjunction with this bed. The use of **ANY** other type of oxygen administering equipment can result in a fire hazard.

99 Seaview Boulevard
Port Washington, NY 11050
Phone: 516-998-4600
Toll Free: 877.224.0946
Fax: 516.998.4601
www.drivemedical.com