STANDER
BE INDEPENDENT.

# OWNERS MANUAL

2041: Bed Cane

**WARNING:** Do not assemble, or use product until you have reviewed and understand the included:

- WARNINGS FOR BED SAFETY
- ENTRAPMENT PREVENTION GUIDELINES
- SOFT MATTRESS WARNING
- ASSEMBLY INSTRUCTIONS

Keep this manual for future reference.
Installer/Assembler: Leave these instructions with the consumer.
For questions or clarification, contact Stander at (800) 506-9901 or (435) 755-0453
2410 Heritage Dr. Logan UT 84321 sales@stander.com www.stander.com

**English-** For Owners Manual in English: www.stander.com/product-manuals

**Español-** Para manual del propietario en Español: www.stander.com/product-manuals

**Deutsch-** Für das Benutzerhandbuch auf Deutsch: www.stander.com/product-manuals

**Français-** Pour le manuel du propriétaire en Français: www.stander.com/product-manuals

**Italiano-** Per il manuale del proprietario in Italiano: www.stander.com/product-manuals

## LIMITED LIFETIME WARRANTY

Stander, Inc. ("Stander") warrants to the original purchaser that the Product will be free from material defects in material or workmanship for the lifetime of the product. This limited lifetime warranty applies only when the Product is used consistent with the Product's specifications and is non-transferable and shall solely be applicable to the original purchaser.

In the event of a warranty claim, the original purchaser must notify Stander, during the warranty period, in writing of the alleged defect in workmanship or material and must ship the Product, along with the proof of purchase, to Stander.

All shipping costs must be paid by the original purchaser. Stander will not refund or pay for any shipping charges.

If Stander determines, upon its sole determination, that there is a material defect in the material or workmanship of the Product, Stander will either send replacement parts or, if needed, replace the product and ship a replacement product or parts to the original purchaser.

The limited lifetime warranty does NOT apply to any Product:

(1) That has been damaged in any way.

(2) That has been altered or modified in any way or is used with any unauthorized attachments.

(3) That was not properly installed or that was not used in accordance with the instructions provided by Stander.

(3) That was used for purposes other than those for which the Product was designed or intended.

(4) Damaged due to abuse, misuse, mishandling, neglect, misapplication, accident or abnormal use or storage.

STANDER MAKES NO WARRANTIES OTHER THAN THOSE EXPRESSLY SET FORTH HEREIN. ALL OTHER WARRANTIES, EXPRESS OR IMPLIED INCLUDING ALL (I) IMPLIED WARRANTIES OF MERCHANTABILITY OR FITNESS FOR A PARTICULAR PURPOSE, OR (II) IMPLIED WARRANTIES ARISING FROM ANY COURSE OF DEALING, USAGE OF TRADE, ADVERTISING OR PERFORMANCE OF PRODUCTS TO STANDARDS SPECIFIC TO THE COUNTRY OF IMPORT, ARE HEREBY EXPRESSLY DISCLAIMED.

THIS LIMITED LIFETIME WARRANTY IS THE FULL AND COMPLETE STATEMENT OF STANDER'S LIMITED LIFETIME WARRANTY OF THE PRODUCT, CONSTITUTES THE ENTIRE AND COMPLETELY INTEGRATED LIMITED LIFETIME WARRANTY OF STANDER, SUPERSEDES ALL OTHER STATEMENTS, AND CANNOT BE VARIED BY ANY ORAL OR OTHER WRITTEN STATEMENT.

THE EXCLUSIVE REMEDY FOR BREACH OF THIS LIMITED LIFETIME WARRANTY IS TO RETURN THE PRODUCT FOR THE REPLACEMENT OF THE NONCONFORMING PRODUCT.

UNDER NO CIRCUMSTANCES SHALL STANDER, INC. BE LIABLE FOR ANY SPECIAL, INCIDENTAL, EXEMPLARY, PUNITIVE, CONSEQUENTIAL DAMAGES, OR OTHER DAMAGES, BASED UPON BREACH OF THIS LIMITED WARRANTY, BREACH OF CONTRACT, OR STRICT LIABILITY.

Some states do not allow limitations on how long an implied warranty lasts. This warranty gives you specific legal rights, and you may also have other rights which vary from state to state. To obtain service under this Limited Warranty, you can reach Stander at (800) 506-9901 or (435) 755-0453.

**DISCLAIMER: Neither Stander nor the manufacturer will be liable for any harm or injury that results from the improper use or assembly of the product.**

**Do not use or attempt to install this product unless you read and understand these warnings and follow all instructions.**

EC REP BEO MedConsulting Berlin GmbH
Helmholtzstr. 2-9
10587 Berlin, Germany

Stander, Inc.
2410 S. Heritage Dr.
Logan Utah 84321
USA
www.stander.com
1.800.506.9901

MD

# WARNINGS FOR BED SAFETY

a) There is a risk of entrapment associated with all bed rails. Entrapment occurs when an individual becomes caught, wedged or entangled in the gaps in or about the bed rail, mattress or bed frame. Entrapment can result in serious injury and death. Read and understand the included WARNINGS FOR BED SAFETY, ENTRAPMENT PREVENTION GUIDELINES, SOFT MATTRESS WARNING and ASSEMBLY INSTRUCTIONS prior to beginning assembly, installation, and use of product.
For further information, see:
https://www.cpsc.gov/Safety-Education/Safety-Education-Centers/Adult-Portable-Bed-Rails and www.fda.gov/bedsafety

b) In the rare occurrence of a serious event with any Stander product, contact Stander at (800) 506-9901 or (435) 755-0453 immediately. A serious event is defined as death or serious deterioration in health that results in a life-threatening illness or injury, permanent impairment, hospitalization, or surgical intervention. In addition to contacting the manufacturer directly, consumers should report problems to the CPSC at this website: https://www.saferproducts.gov/ or call 1-800-638-2772, or to the FDA at 1-800-332-1088. Also report to the competent authority of your member state.

c) Before installing this product, you must ensure that it is safe to use on your bed and mattress. This product can only be used on beds and mattresses that comply with the specifications set forth in the included WARNINGS FOR BED SAFETY, ENTRAPMENT PREVENTION GUIDELINES, SOFT MATTRESS WARNING and ASSEMBLY INSTRUCTIONS. If you have any questions about compatibility, installation, or safe use, please contact Stander at (800) 506-9901 or (453) 755-0453.

d) This product is for adult use only and is intended to assist disabled persons by providing minimal to moderate weight support while standing from bed. This product is NEVER to be used as a device to restrain individuals from getting into and out of bed.

e) This product is equipped with a Safety Strap that securely attaches the product to a bed frame. NEVER use this product without securely attaching it to bed frame. Failure to properly secure product to bed frame with Safety Strap significantly increases the risk of entrapment, and may result in personal injury or death. NEVER remove or use the product without Safety Strap.

f) NEVER use unless product is tight against mattress, without gaps and Safety Strap has no slack. A gap between product and mattress means the product was installed improperly. STOP using product immediately if a gap is noticed between the side of the mattress and the product. STOP using product immediately if product is damaged, broken, or if parts are missing. STOP using product immediately if product shifts out of its original position until it is readjusted into the correct position.

g) NEVER use this product on an adjustable bed.

h) NEVER use multiple bed rails on the same side of the bed.

i) If this product is used in a nursing home, assisted living center, or a similar facility, follow these instructions and all of the facility's Bed Rail/Handle policies. DO NOT install or use this product if it does not comply with the facility's policies.

j) If product is removed from bed, DO NOT reinstall until you have read and fully understand the included WARNINGS FOR BED SAFETY, ENTRAPMENT PREVENTION GUIDELINES, SOFT MATTRESS WARNING and ASSEMBLY INSTRUCTIONS.

k) ALWAYS position the product at least 12.5 inches from the head of the bed and the foot of the bed, as shown in FIGURE A. ALWAYS ensure that the top of bed rail is a minimum of 4 inches (10.2cm) above top surface of mattress, as shown in FIGURE A. Incorrect placement increases the risk of entrapment, serious injury, or death.

l) ALWAYS secure and maintain the product tight against the mattress with no gap between the product and the mattress, as shown in FIGURE B. When properly installed there is no gap between the product and the mattress. A gap indicates improper installation. If a gap is present, STOP using immediately and re-install correctly.

m) WARNING: If the safety strap provided is not properly secured, the product may move into an unsafe position which increases the danger of entrapment. See included ASSEMBLY INSTRUCTIONS for proper use of the straps.

n) You must measure your mattress and confirm that it is between 6 inches – 14 inches thick. NEVER use unless your mattress is between 6 inches – 14 inches thick. Using a mattress that does not fall within this thickness range increases the risk of entrapment, serious injury, or death.

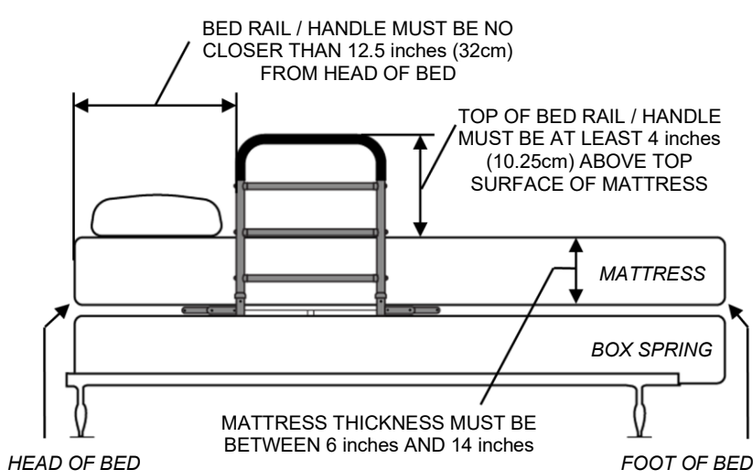


**FIGURE A**

**ACTUAL PRODUCT MAY DIFFER FROM DIAGRAM SHOWN*

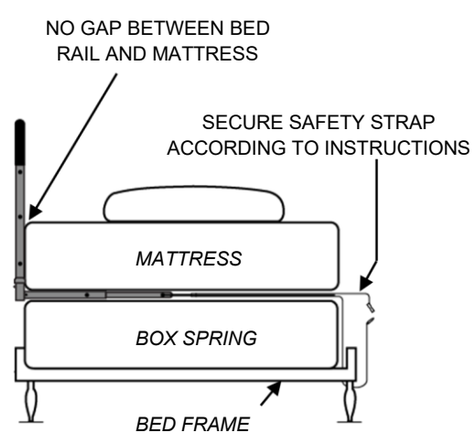


**FIGURE B**

## WARNINGS FOR BED SAFETY

# ⚠ WARNING ENTRAPMENT, STRANGULATION, SUFFOCATION AND FALL HAZARD

This product is NEVER to be used by people with Alzheimer's disease, dementia, restlessness, or those who are sedated, confused or frail. Gaps in and around this product can entrap and kill. People with Alzheimer's disease or dementia, or those who are sedated, confused, or frail, are at increased risk of entrapment and strangulation. People attempting to climb over this product are at increased risk of injury or death from falls. Always make sure this product is properly secured to bed. If product can move away from bed or mattress, it can lead to entrapment and death.

# ⚠ WARNING SUFFOCATION, STRANGULATION, ENTRAPMENT HAZARD

If product is installed incorrectly or moves from its initial position, gaps can occur which can entrap and kill. People with Alzheimer's disease, dementia or other neurological conditions, or those who are sedated, confused, or frail, are at increased risk of entrapment, suffocation, and strangulation.

- NEVER use unless product is tight against mattress, without gaps, and at least 12 ½″ (32cm) from headboard and footboard.
- NEVER use with children.
- NEVER use on toddler, bunk, water, or inflatable beds or on beds with mattress toppers or soft compressible pads.

## ENTRAPMENT PREVENTION GUIDELINES

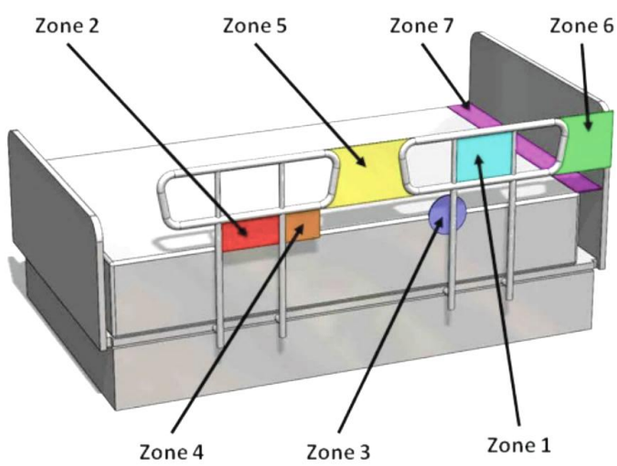


## ENTRAPMENT ZONES

**Zone 1: Within the Rail** – The FDA states any open space between the perimeters of the rail greater than 4.75 inches (12cm) poses a risk of head entrapment. This space is less than 4.75 inches (12cm) on all Stander bed rails.

**Zone 2: Under the Rail** – A gap between the bottom of the bed rail and the top of the mattress poses a risk of entrapment. Prevent this risk by adhering to included WARNINGS FOR BED SAFETY and ASSEMBLY INSTRUCTIONS.

**Zone 3: Between the Rail and the Mattress** - A gap between the inside surface of the bed rail and the mattress poses a risk of entrapment. Prevent this risk by adhering to included WARNINGS FOR BED SAFETY and ASSEMBLY INSTRUCTIONS.

**Zone 4: Under the Rail at the Ends of the Rail** - A gap between the mattress and the lowermost portion of the bed rail poses a risk of entrapment. Prevent this risk by adhering to included WARNINGS FOR BED SAFETY and ASSEMBLY INSTRUCTIONS.

**Zone 5: Between Two Bed Rails** - When multiple bed rails are used on the same side of the bed, the space between the bed rails poses a risk of entrapment. Prevent this risk by NEVER using multiple bed rails on the same side of the bed.

**Zone 6: Between the End of the Rail and the Side Edge of the Head or Foot Board** - A gap of less than 12.5 inches (32cm) between the end of the bed rail and the side edge of the headboard or footboard poses a risk of entrapment. Prevent this risk and maintain a gap greater than 12.5 inches (32cm) by adhering to included WARNINGS FOR BED SAFETY and ASSEMBLY INSTRUCTIONS.

**Zone 7: Between the Head or Foot Board and the End of the Mattress** – A gap that is too large between the inside surface of the headboard or footboard and the end of the mattress increases the risk of head entrapment, which can lead to serious injury or death.

## SOFT MATTRESS WARNING

**THERE IS A MUCH GREATER RISK OF ENTRAPMENT AND SERIOUS INJURY/DEATH WHEN USING BED RAILS WITH A SOFT MATTRESS!** A soft mattress increases the risk that a person's head, arm, or leg could become entrapped between the mattress and a rail. Entrapment can cause injury or death.

**To ensure it is safe to use this product, test your mattress BEFORE ASSEMBLY AND INSTALLATION by applying 12lbs (5.4kg) of force to a 4 inch x 4 inch (10.16cm x 10.16cm) area immediately adjacent to the edge of the mattress next to where the product is to be installed.** If the mattress compresses more than 2 inches (51cm) when applying 12lbs (5.4kg) of weight to a 4 inch x 4 inch (10.16cm x 10.16cm) area, **DO NOT USE THE PRODUCT without also installing the Bed Rail Safety Guard (item #2400/ #2450 sold separately)**. The Bed Rail Safety Guard is designed to minimize the risk of entrapment. If you are unsure, install the Bed Rail Safety Guard **(item #2400/ #2450 sold separately)**

Visit stander.com/extra-soft-mattress for more information or call Stander at 800-506-9901.

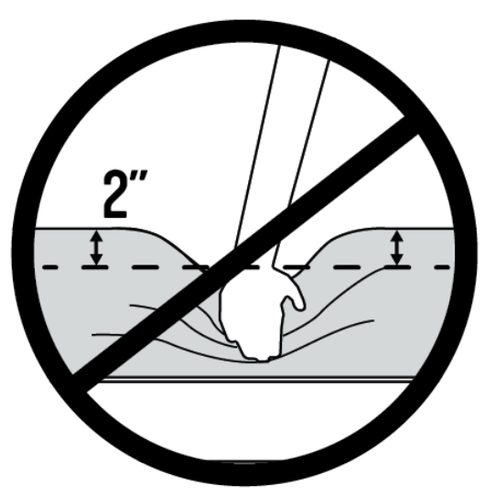

## ASSEMBLY INSTRUCTIONS

**WARNING:** Do not begin assembly until you have reviewed and understand the included:

- WARNINGS FOR BED SAFETY
- ENTRAPMENT PREVENTION GUIDELINES
- SOFT MATTRESS WARNING

For questions or clarification, contact Stander at (800) 506-9901 or (435) 755-0453 before proceeding.
Failure to follow these instructions increases the risk of entrapment, serious injury, or death.

### SPECIFICATIONS

**Product Name:** Bed Cane

**Product #:** 2041

**Maximum User Weight:** 300lbs (136kg)

**Mattress Height Compatibility:** Between 6 inches (15cm) and 14 inches (35.5cm) thick.

**Bed Type Compatibility:**
Use ONLY on a bed with a bed frame that the SAFETY STRAP can attach to, per ASSEMBLY INSTRUCTIONS. NEVER use on an adjustable bed.

**Cleaning:** Clean product with warm water and soap. Dry thoroughly before using.

**Recycling:** Product should be recycled in accordance with national guidelines.

1. Remove product from box and identify all parts as shown in *FIGURE 1*.

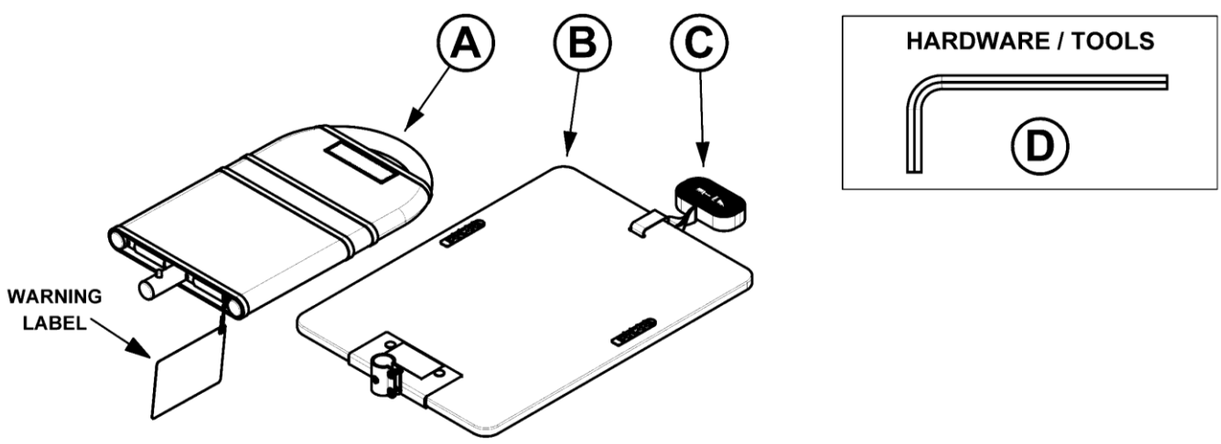


**FIGURE 1**

2. Insert Rail **A** into Base **B** and align spring button in Rail **A** with hole in Base **B,** as shown in *FIGURE 2*.

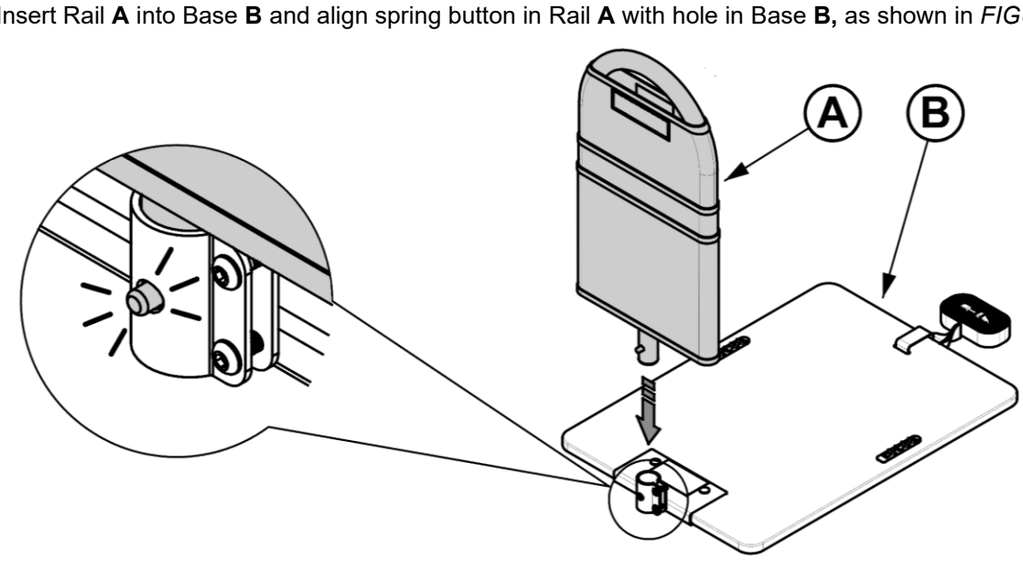


**FIGURE 2**

**3.** Tighten the 2 pre-installed screws in Base **B** using Tool **D**, as shown in *FIGURE 3*.

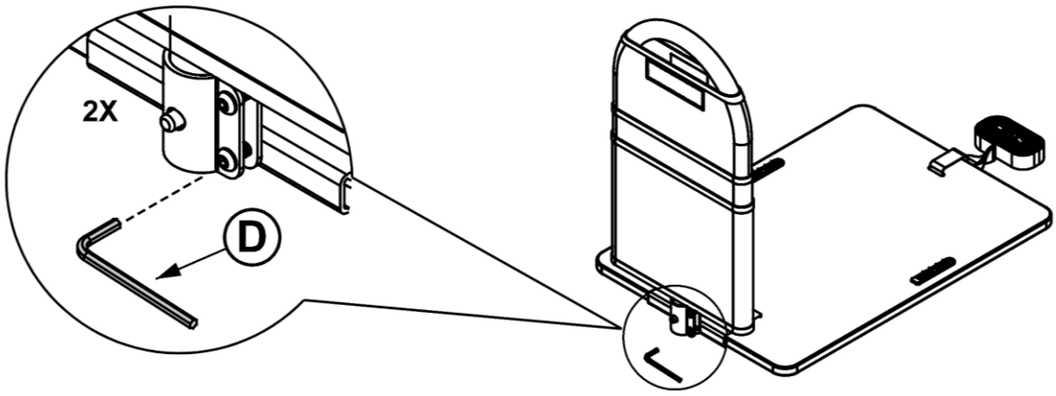


**FIGURE 3**

**4.** Place base of product directly under the Mattress and extend the Safety Strap **C** below the Mattress to the opposite side of the Bed. Unbuckle Strap, loop around Bed Frame, re-buckle and tighten the Safety Strap to secure the Bed Rail against the side of the Mattress as shown in *FIGURE 4.* Ensure the Bed Rail is tight against the Mattress without gaps and the Safety Strap has no slack.

**⚠ WARNING SUFFOCATION / STRANGULATION / ENTRAPMENT HAZARD**

**NEVER use unless product is tight against Mattress, without gaps and Safety Strap has no slack. If the Safety Strap is not properly secured, the product may move, which increases the risk of entrapment, serious injury or death.**

NEVER USE PRODUCT IF NOT PROPERLY STRAPPED TO BED:

- Edge of installed Bed Rail **A** must be at least 12.5” from Head of Bed.
- There must be NO gap between Bed Rail **A** and Mattress.
- There must be NO slack in Safety Strap **C** after tightening.

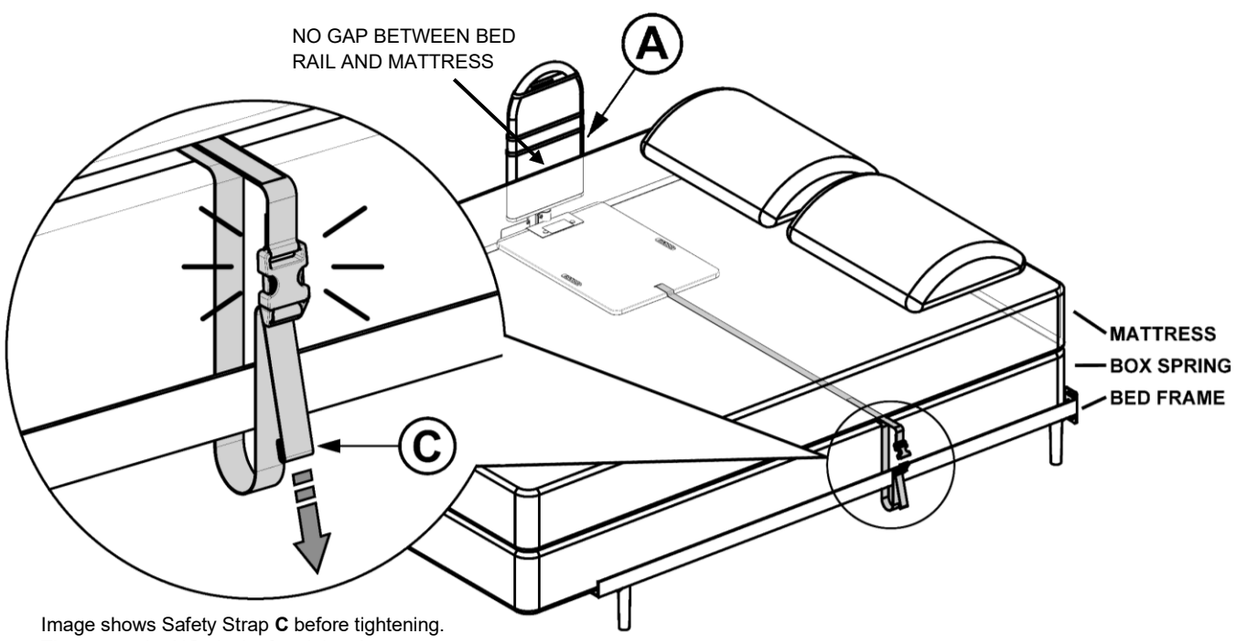


Image shows Safety Strap **C** before tightening.
There must be NO slack after tightening.

**FIGURE 4**