EasyGO MOBILITY INC.

Elite Model Owner's Manual

Contents

GUIDANCE FOR USE 1

INTRODUCTION 2

SAFETY SIGNS 3

FEATURES 4

TECHNICAL SPECIFICATIONS 6

ELECTROMAGNETIC INTERFERENCE WARNING 7

SAFETY 8

INSTALLATION GUIDE 15

OPERATION GUIDE & ELECTROMAGNETIC UNLOCK VALVE 17

TROLLY WHEEL 20

BATTERY 21

UNFOLDING 24

FOLDING 25

GET ON FROM THE SIDE 26

CONTROLLER 27

TROUBLESHOOTING 28

WARRANTY 30

PACKING LIST 31

GUIDANCE AND MANUFACTURER'S DECLARATION 32

Guidance for Use

This product is driven by DC motor (the ambient temperature ranges from -5°C to 45°C). Used by the elderly and the disabled as a travel tool, the power wheelchair is ultra-compact, light-weight, portable, safe and comfortable.

WARNING

To Users:

Do not operate the power wheelchair without prior reading and understanding of this owner's manual. If you have problem in comprehending the warnings, notes and instructions contained in the manual, please contact your distributor for professional guidance and help, otherwise it may cause bodily injury due to the improper use. In addition, you can operate the power wheelchair under the guidance of the professional technicians with vocational qualification.

To Distributors and Technicians:

Do not operate the power wheelchair without prior reading and understanding of this owner's manual. If you have problem in comprehending the warnings, notes and instructions contained in the manual, please contact EasyGo Mobility Inc for professional guidance and help, otherwise the users may cause bodily injury due to the improper use.

Introduction

Dear customer,

Thank you for choosing EasyGo Standard Model power wheelchair, which has excellent qualities of safety, comfort and portability in design and manufacture.

The Standard Model will help you regain your mobility, and it will be your most trustworthy and dependable friend.

★Please read all instructions in this manual carefully before use for the first time. This manual will help you understand the performance, operation and proper maintenance of the power wheelchair. If you need further help and advice or you cannot control the wheelchair well, please contact your distributor or manufacturer to get better guidance and assistance.

EasyGo Mobility Inc.

Safety Signs

The following signs are used to identify warnings, mandatory actions and prohibited actions. It is essential that you shall fully understand and completely familiarize yourself with these signs before use.

Read and follow the instructions provided in this manual.

Safety warning sign or an indication of a dangerous operation that may endanger others or yourself.

Class II (auxiliary) equipment

General-applied Part

Easy-to-squeeze/crush part

Store in a clean and dry condition; away from rain, snow, ice, salt and water.

Pass the test of EMI/RFI at an immunity level of 30 V/m.

Corrosive substance contained in the battery

Danger of explosion

Keep tools and other metal objects away from both ends of the battery. If contacted, short-circuit or electric shock may occur and cause injury.

Flammable material, avoid exposure to heat source such as open flames or sparks. Do not transport with flammable, explosive or combustible materials.

Battery disposal and recycling

Not to be used in motor vehicles

Features

1. Backrest 2. Armrest Unlock Button 3. Joystick
4. Seat Cushion 5. Battery 6. Motor
7. Front Wheel 8. Reversible Footrest

Features

9. Front Fork 10 Unlock Drawstring 11.Electromagnetic Unlock Valve
12. Anti-Tipping Wheel Unlock Button 13. Anti-Tipping Wheel 14 .Splash Guard
15.Trolly wheel

Technical Specifications

Mode	Elite Model
Dimensions (Unfolded): L x W x H	36.6"x 25.1"x 37.4" (930 x 640x 950mm)
Dimensions (Folded): L x W x H	31.4" x 25.1" x 12.6" (800x 640 x 320mm)
Suggested User Weight	264 lbs (20kg)
Weight	56 lbs (25.4 kg) *with battery* / 50 lbs (22.9kg) *without battery*
Maximum Climbing Angle	6 degree
Full Charge Mileage	Theoretical continuous driving distance range: 15 miles (24.3km) theoretical maneuvering distance range(km): 6.8 miles (11.0km)
Max Speed	3.7 mp/h (6 km/h)
Turning radius	28.3" (720 mm)
Maximum Obstacle-crossing Height	1.4" (35mm)
Motor	
Type	Brushless DC Motor
Rated Power	140W
Input Voltage/ Current	DC 24V
Qty	2
Break System	Intelligent Electromagnetic Brake
Breaking Distance	At max speed: < 39"
Battery	
Type	Lithium-ion Battery
Nominal Capacity	12 Ah
Output Voltage	DC 24V (Charging current 2A，+29.4v，Off-board Battery charger c,IPX1)
Qty	1
Controller	
Type	Brushless Dual-drive Rocker Controller
Input Power	280W
Input Voltage/ Current	DC 24V/12A withstand peak: 15A
Front Wheel	
Wheel Diameter x Tire Width	7" x 1.4" (178mm x 35 mm)
Type	Solid Tire
Material	PU
Qty	2
Rear Wheel	
Wheel Diameter x Tire Width	12" x 2.2" (300mm x 55 mm)
Type	Solid Tire
Material	PU / Rubber
Qty	2
Backrest	
Adjusting Way	Null
Adjusting Angle	Null

Electromagnetic Interference Warning

⚠ WARNING

The power wheelchair may be affected by electromagnetic interference (EMI). Therefore, it's quite essential for users to familiarize the instructions.

This section aims to describe the problems caused by the electromagnetic interference, which can help users understand and take protective measures against the risks.

★ The Interference of Electromagnetic Waves

The power wheelchair is susceptible to electromagnetic waves, the sources of which come from broadcasting stations, TV stations, radio transmitters, and the communication equipment such as two-way radios. Interference from these electromagnetic waves may cause malfunction or permanent damage to the wheelchair's braking and control system. The power wheelchair has passed the 30 V/m EMI test and has a certain degree of immunity to most common electromagnetic energy sources in life.

⚠ CAUTION

1. Stay away from all radio wave emission sources, such as TV stations, Radio station, etc.
2. If interference does occur and causes unintended movement to the wheelchair in an uncontrolled manner, cut off the power immediately.

No modification of any form to the power wheelchair is allowed, including adding or removing any parts, in case of decreasing its anti-interference ability.

Users

⚠ WARNING

1. Keep tools and other metal objects away from both ends of the battery. If contacted, short-circuit or electric shock may occur and cause injury.
2. Health care personnel shall receive professional training and guidance in safe use of the power wheelchair.
3. You shall first familiarize yourself with the power wheelchair before use.
4. You shall practice operating the power wheelchair with the aid of the health care personnel until you are confident enough to independently, skillfully and safely perform the operations, such as moving forward, turning, crossing obstacles, braking, etc.
5. Do not perform unfamiliar operations if you cannot confirm the safety.
6. You shall check the operating site in advance, identify the safety in the area and make preparations for taking protective measures against the risk.

Caregivers

⚠ WARNING

1. Based on the specific needs of the users, you need to help them to develop a safest plan combining with the advice of the doctors, nurses and physiotherapists.
★ 2. When pushing the power wheelchair, you have to pull the electromagnetic unlock valve to the Free Wheel or Unlock Mode. In this case, the brakes on the controller will completely not work.
3. Following issues shall be focused on when pushing the power wheelchair:
   1) You shall help users to keep their body in the correct posture in accordance with the dynamics of the human body, in order not to hurt users' back. You can slightly bend your knees and straighten your back vertical when lifting up users or inclined power wheelchair.
   2) Before operating, you shall tell users what you intend to do, your reasons for doing so and what you want them to do, which will help users to make preparations against the accidental injuries.
   3) Be aware of the upstairs, downstairs and the turning corners, where you may fall or turn over.
   4) You shall remind users to closely lean against the backrest when you are going to tilt the wheelchair backwards.
   5) You shall slowly move the power wheelchair down the steps, in case of making users injured as well as damaging the wheelchair itself. Please pay attention to keeping the road smooth.
   6) Be careful trapping hazards

Control Panel

⚠ WARNING

Please be noted that you may need to adjust the settings of control panel (Fig. A1) to avoid the risk of collision, descent or fall.

1. Check and adjust the settings of control panel every six months.
2. If you need to change the functions and settings of the control panel, please contact the supplier.

Static Position

⚠ WARNING

1. When the electric wheelchair stops, please turn off the power even for a short period of time, which can:
   - Prevent accidental movement of the wheelchair when you or someone else accidentally touches the joystick.
   - Prevent accidental electromagnetic interference, which may affect the normal use of the electric wheelchair.
2. Non-users should not touch the joystick to prevent abnormal movement of the electric wheelchair.

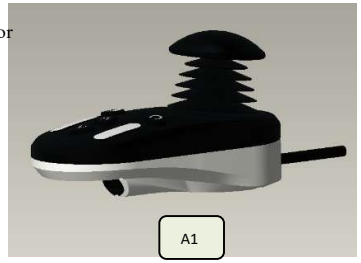

Using Environment

⚠ WARNING

This power wheelchair shall not be used or stored in heavy rain, snow or ice.

1. Exposure to water or excessive moisture may cause electrical failures. Frames, motors and other parts are not completely waterproof and may rust or corrode from the inside.
   To prevent malfunction, please adhere to the guidelines as follows:
   ★● Avoid using or placing the wheelchair in a humid environment or directly contacting with water (e.g. heavy rain).
   - Do not use the electric wheelchair when showering, sauna or swimming.
   - Do not use the wheelchair around any water sources (e.g. river, lake, sea, etc.).
   - Replace the control panel if it is damaged.
   - Ensure that all electrical connections are safe and non-loose.

   ★● You must not wash the wheelchair with water. If the electric wheelchair is wet, please remove the battery as soon as possible and make the wheelchair dry. Make sure the wheelchair is dry before loading the battery to use it.
2. When operating on wet or frictionless ground surfaces, please carefully move at a slow speed.
   - You must make sure that it is safe to do so.
   - If one or two of the main wheels lose traction, you must stop immediately to prevent the electric wheelchair from getting out of control or falling down.
   - Do not drive into slopes or ramps covered with snow, ice, water, oil, etc.

★ 3. Please ensure the power is off when finish using, make the batteries full-charged and keep the wheelchair clean and dry.

Road Surfaces

⚠ WARNING

1. The power wheelchair is designed optimally for level surfaces; such as concrete, asphalt and indoor ground flooring.
2. Do not use the wheelchair on sand, loose soil or uneven surfaces to prevent damage to wheels, bearings, shafts and motors, as well as possible loosening of fasteners.

Drive in Traffic Environment

B1

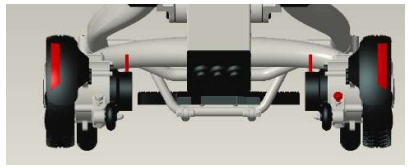

⚠ WARNING

Please beware of the local traffic regulations on public roads.

You must be aware of that it is dangerous to drive on public roads or parking lots.

1. For increased visibility at night, the wheelchair has light reflecting markers (Fig. B1).
2. Users can also wear reflective clothing.
3. When operating the wheelchair in traffic amongst motor vehicles, make sure the driver notices you. Before you continue to operate the wheelchair, make eye contact with the driver and make gestures to show your intentions until you are sure it is safe to drive.

Take Motor Vehicles

⚠ WARNING

1. Please do not use the wheelchair when taking any forms of transportation such as bus, metro, train, plane and ship.
2. If you take such forms of transportation while remaining in the wheelchair, it is extremely important to fasten your seat belt, and find a place where the wheels or the wheelchair can be fixed to avoid injury in the event of a sudden stop or a traffic accident.
3. Do not place the wheelchair in the front row of the vehicle so as not to interfere with the driving.
4. Avoid lifting the user together with the wheelchair when getting on and off the vehicles. If it is really necessary to lift up, please grip the front and rear edges of the seat cushion frame and never lift the wheelchair by the armrest or rear backrest.

Driving Balance

⚠ WARNING

Keep the balance and stability of the power wheelchair to avoid tipping over while driving forward and backward.

The following factors may affect the weight distribution of the wheelchair:

1. seat height and seat angle
2. changes in the position, posture, or weight distribution of the user's body
3. gradient of the ramp or slope
4. Whether backpacks or other items change the total weight and weight distribution of the wheelchair

B2

- If you need to modify or adjust the power wheelchair, please consult your supplier in advance and obtain the manufacturer's authorization. The modified wheelchair may require additional adjustments to correct the balance. Operate the modified wheelchair with special caution until you are familiar with the balance and the means to avoid falling or tipping over.

Getting On/Off

⚠ WARNING

It is dangerous to move your body by yourself because it requires good balance and flexibility. Whenever moving your body, it is recommended to have a supporting point that is higher than the seat cushion to avoid falling.

★ 1. Before getting on the wheelchair, ensure that the power is off. Otherwise, if you touch the joystick, it may lead to unexpected movements.
2. Make sure that the motor is in “Lock” position and the wheelchair will not move on its own.
3. Consult your health care professionals about the safest way to move your body.
   - Learn how to position your body and how to support yourself while moving.
   - Ask others to help you until you are sure that you can safely get on and off the wheelchair.
4. Move the wheelchair as close as possible to the target position. If possible, please use the related auxiliary equipment.
5. Turn up the footrest with your hands or feet (Fig. B2), then hold the armrests to give yourself a suitable way to get on the wheelchair.
   - Do not stand on the footrest to move your body to avoid the injury.
   - Lift the footrest up before you get on the wheelchair to avoid obstruction.
6. When you get off the wheelchair, please lift up the footrest first. (Do not stand on the footrest while getting on/off to avoid falling), or press the armrest unlock button on either side, then pull up the armrest and get off from the side (Fig. B3).

B3

Body Inclination and Extension

⚠ WARNING

Reaching out your hands or tilting your body will affect the weight balance of the electric wheelchair. If you do not position your body correctly, you may fall off or tip over from the wheelchair.

Followings are a few measures against the risk of making users injured or damaging the power wheelchair:

1. If you have to shift your body weight such as lifting your body at one side or leaving the seat, please do not lean your body out of the range of the seat cushion.
   When moving forward on your seat, do not lean your body excessively. Your hip must be always in contact with the seat cushion.
2. Do not reach your hands to get the things farther than your capability as this may result in falling due to lost balance.
3. Under no circumstance should you try to pick up anything through the space between your knees or in front of your body.
4. When you extend your body, do not exert force on the footrest to avoid the wheelchair from tipping over, which may result in serious injury.
5. Do not lean against the top of the backrest in case of falling and damaging the backrest.

★ Notes:

1. Move your wheelchair as close as possible to the target position.
2. If you move your wheelchair beyond the target position, please move backwards to approach it.
3. After reaching the target position, please turn off the power and hold the handrail tightly, which prevents the risk of falling if the electric wheelchair is tilted.

Getting Dressed on the Wheelchair

⚠ WARNING

Note: When you get dressed in the wheelchair, please make sure the power is off to prevent the wheelchair from moving due to accidental touch of the joystick.

Crossing Over Obstacles

⚠ WARNING

You may need to overcome some obstacles in your daily use, including doorsills, elevators, slopes, pot holes and rough roads. Improper use may result in damage to the wheelchair or causing bodily harm.

1. Extreme caution is needed when crossing the doorsill. Even a slight height change may make the front wheels stuck in, tipping over your wheelchair. So please:
   - Remove or cover the doorsill with a slope to make the wheelchair climb and descend.
   - Position a ramp door.
2. When moving the wheelchair, please take a closer look at the area you are going through.
3. Ensure that you can cross over the obstacles smoothly and safely while using the wheelchair.
4. Followings are the measures to move your body:
   - Slightly tilt your upper body forward when you are about to cross an obstacle.
   - Lean your upper body gently against the backrest when crossing over an obstacle with a descending slope.

Reverse Driving

⚠ WARNING

Please be extremely cautious when driving in reverse. If the rear wheels run into an obstructive object, your wheelchair may get out of control and tip over.

1. You shall approach slowly while driving in reverse.
2. You shall often stop and check to ensure that all obstructive objects are cleared on your passing road.

Driving on Inclined Slopes

⚠ WARNING

When you drive on a slope, the balance of the wheelchair will change.

★ The slopes include hillsides and ramps. When you are not sure about the safe use on slopes, please use it with the help of others and do not use it alone.

Following issues are needed to be extremely cautioned:

1. It is prohibited to drive on slopes over 6°.
2. It is prohibited to drive on a wet slippery slope (e.g., snow, ice, water, oil).
3. It is prohibited to drive in areas with continuous up and down slopes.
4. It is prohibited to drive on slopes if there are pits at the bottom of the slopes.

Safety

Load Limit

⚠ WARNING

1. The max load of the wheelchair is 120kg (264lbs), do not exceed the max load while using the wheelchair.
2. Under no circumstances should the users do weight training while using the wheelchair.
3. Overloading the wheelchair may cause damage to the seat, frame, fastened parts and folding device. It may cause serious damage to the users or others, and also damage the wheelchair.
4. No warranty shall be provided for any problem caused by overloading in use.

Getting Up/Down Escalators

⚠ WARNING

Following issues shall be noted when getting up/down escalators:

★It is prohibited to move or use the wheelchair on stairs and escalators. Serious bodily injury may be caused. Wheelchairs can be used in elevators. Please move the wheelchair when the elevator door is opened, and make sure the door remains open when you pass through the door.

Installation Guide

Seat Belt Installation

⚠ WARNING

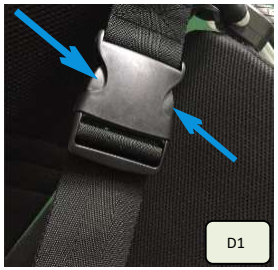

Seat belt is designed to fix the user's body and prevent the user from sliding down. It cannot protect the users in accidents.

The seat belt can be adjusted according to the user's comfort.

The use of the seat belt:

1. You must fasten the seat belt to ensure personal safety.
2. Open the safety buckle (Fig. D2) by pinching the plastic card (Fig. D1).
3. After sitting down, insert the buckle plastic card into the plastic case on the other side and you will hear a click.
4. You can adjust the length of the seat belt via the adjusting buckle (Fig. D3).
5. When you need to get off the wheelchair, press the safety button and pull out the plastic card.

⚠ CAUTION

Always ensure the seat belt is properly installed on the wheelchair and appropriately adjusted so that it does not make you uncomfortable.

Always check the seat belt for any loose part or if it is damaged. If any problem is found, please ask for maintenance or repair through after-sales service.

Installation Guide

Control Panel Installation

Based on the users' needs, the control panel can be mounted on the right or left armrest. (The control panel is initially mounted on the right armrest, please contact the supplier if you want to change it to the left side)

1. As shown in Fig. E1, the control panel is mounted on the right side of the frame (right side in the forward direction).
2. If the controller needs to be removed, Unplug the plug and loosen the clamp
3. As shown in Fig. E2 and Fig. E3, plug the control panel cable and the extended cable together and rotatably fix them with the lock ring.

E1

E2

Unlock method A

E4

E5

E6

Unlock method B ★This accessory needs to be purchased

Unlock instructions:

1. Pull the quick-release pin at the position shown in E6 outward.
2. Rotate 180° outward in the direction shown in E6 until locked.
3. If you need to return to the position, pull out the pin again and turn the controller on.

E6

E6

Operation Guide

Control Panel

The operation of the electric wheelchair is controlled by buttons and joystick on the control panel. The buttons are described below

OFF

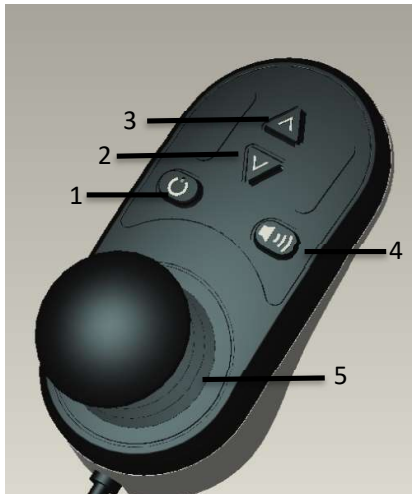

ON

1. Power Button: Press this button to turn it on, and press it again to turn it off.

2. Deceleration Button

Press this button to slow down.

3. Acceleration Button

Press the button to increase the speed.

Max. speed: 6 km/hr (3.75 m/hr).

4. Horn Button

Make a sound to remind the people around.

5. Control Joystick

Control the direction and speed of the wheelchair. Push the joystick towards the desired direction. (refer to the instructions on Control Joystick)

6. Speed Indicator

There are 5 lights in all. With 1 light on, the wheelchair is at its lowest speed, 5 lights on, the wheelchair is at its max speed.

7. Battery indicator

Indicate the remaining battery.

Operation Guide

Power-On/Off Button

1. Press this power button to turn it on.
2. Press it again to turn it off.

Electromagnetic Unlock Valve

1. As shown in Fig. E8, electromagnetic unlock valve is in "Lock" position with the pristine condition. When the wheelchair is out of power, the electromagnetic unlock valve works and the wheelchair brakes urgently, which avoids the risk that the wheelchair slips off the slope without being controlled.

1. As shown in Fig. E9, when the wheelchair motor is out of power, electromagnetic unlock valve can be pushed upwards to "Unlock" position, which allows the wheelchair to be moved manually. (Please push downwards the electromagnetic unlock valve to the lock position after manually moving.)

In "Lock" position

E8

In "Unlock" position

E9

Operation Guide/Electromagnetic Unlock Valve

Control Joystick

⚠ WARNING

1. When learning to operate the electric wheelchair for the first time, you should choose a slower speed and gently tilt the joystick forward. This practice will help you learn how to control the electric wheelchair, let you slowly understand and familiarize with how to control the strength, and smoothly grasp the method of starting and stopping the electric wheelchair. ★★★

2. Set the control panel properly.
3. Do not make sharp turns at high speeds.
4. Fail to follow the warnings may result in tilting and causing serious bodily injury and property damage.
5. The joystick on the control panel controls the speed and direction smoothly. It has 360-degree omnidirectional mobility and is easy to operate. The joystick is equipped with a spring inside so that it can automatically returns to its original position.
6. Push the joystick towards the target direction. The joystick can control the drive proportionally, the harder the push, the faster it goes. The max traveling speed is 6km/hr (3.75miles/hr).
7. If you want to slow down the speed, just release the joystick. The wheelchair will automatically decelerate and correct the direction with a minimum range.

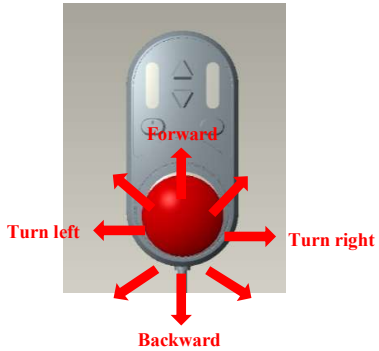

Control Joystick

Electromagnetic Unlock Valve

The electromagnetic unlock valve has two modes ("Free Wheel" and "Drive" shown in Fig. E6). Please ensure it is in "Drive" position before using. Otherwise, it may cause security risks.

In "Lock" position

E6

In "Unlock" position

E7

Trolly wheel usage method

1: stand on the ground after the chair is locked.

2: hold the end of the seat tube and tilt the wheel chair. then push&pull it.

Battery

Keep conductive objects such as metal away from both ends of the battery. If contacted, short-circuit or electric shock may occur and cause injury.

Avoid exposure to heat source such as open flames or sparks. Do not transport with flammable, explosive or combustible materials.

Corrosive substance is contained in the battery. Do not disassemble the battery.

Do not short-circuit the battery or put the battery into the fire to avoid an explosion accident.

⚠ WARNING

1. Do not attempt to directly using pliers or metal cables to charge the battery.
2. Do not use the wheelchair when the battery is being charged.

★ 3. Do not use non-standard power supplies (eg. generator or inverter), even if their voltages and frequencies appear to meet the requirements.

★4. Prevent the power cord from being stepped on, crushed and severely bent, especially at the port part. Prevent the power cord from being yanked and knotted.

5.Keep children and pets away from the power cord and don't let pets bite and chew the source line. When pulling the power cord, please hold the plug and pull it out.

6. If there is any issue with the circuit breaker, pull out the charger immediately and contact your contributor or professional technicians.

7. The electronic locking anti-drive device will be activated that prevents the chair from operating when battery is being charged.

8. The battery warranty and performance indicated in the guide are only suitable for Li-ion Battery.

9. Do not smoke or ignite anything around the battery.

10. Suitable ambient temperature for battery use ranges from -5℃ to 40℃.

⚠ CAUTION

★1. Always check if the battery is fully charged before use. The regular charging time is about 5.5 hours. When the power runs out, it may take 6-7 hours to charge fully until the red light on the charger turns green.

★ 2. You shall charge the wheelchair after using until the charger indicator turns green. If the electric wheelchair is not used for a long time, please fully charge every 2 months. If the battery is not charged for a long time, it will not be able to use, which will severely damage the wheelchair.

3. Do not use the batteries with incorrect specification, voltage and capacity that may damage your wheelchair and affect the performance.

Mount/Remove Battery

⚠ WARNING

Ensure the wheelchair is powered off before mounting or removing the battery.
Take out the battery:

Pull the battery out of the main frame tube by gripping the cover (Fig. F1)

Mount the battery:

Grasp the battery, place the battery handle downward, obliquely insert the battery into the main rack tube until the main rack tube is buckled (Fig. F2)

The battery has been mounted firmly (Fig. F3)

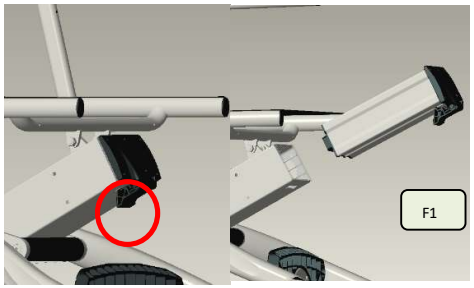
F1

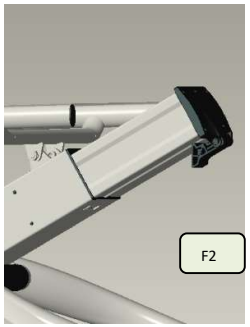
F2

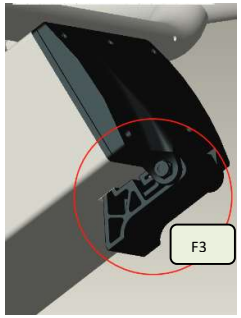
F3

Charge the Battery

1. The battery can be charged with normal AC power (AC 110-220 V, 50-60 Hz). The charging port is located under the front part of the control panel.
2. Before charging, ensure the wheelchair is powered off.
3. **Plug the charger into the charging port under the front part of the control panel (Fig. F4), or unplug the battery and plug the charger into the charging port of the battery (Fig. F5).**
4. Plug another end of the charger into the power socket. When the red light is on, it indicates that it is charging. **Do not use the wheelchair when the battery is being charged. ★**
5. When the indicator turns green, keep charging for additional 30 minutes to allow the battery to be fully charged. Unplug the charger from the power outlet before unplugging from the charging port of the control panel.
6. Please charge the battery in an appropriate temperature. The recommended ambient temperature for charging ranges from 5° C to 40° C.

F4

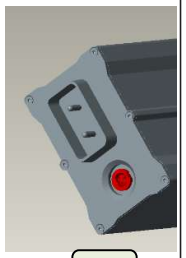
F5

Over-discharge Protector

★ The lithium battery will be permanently damaged, if the battery's capacity has been completely discharged. Therefore, wheelchair is equipped with an over-discharge protector. When the lithium battery is running out, the protector will cut off the circuit automatically and the controller will stop working. So the users should be noted that the battery should be charged in time when the power is displayed in the last grid, otherwise the battery may be scrapped if the battery cannot be activated by the charger.

★Maximum Charge voltage 29.4V Cut-off voltage 19.6V

Over-current Protector

★ The power wheelchair is also equipped with an over-current protector. If the current supplied to the motor is too high, the over-current protector will cut off the current supply. If the climbing gradient is greater than 6 degrees, the load exceeds 120kg, or the motor is blocked, the overcurrent protector will be activated and the wheelchair controller will cut off the circuit to prevent overcurrent and overheating of the motor.

Battery Socket Cleaning

1. Check the battery pack and the positive and negative poles for any corrosion. If any, clean the charging port with battery cleaning tools, such as steel brush and medium sand paper.
2. Clean up all the metal dust carefully.
3. Check if the battery and the plastic battery pack are assembled appropriately.

★ Note：Do not allow the substance inside the battery contact with your skin, clothes or other items. The acidic substance is extremely hazardous and may cause serious burn. When contacted, immediately flush your skin with cold water. If the condition is severe or the substance contact with your eyes, please seek medical attention immediately.

Unfolding

Unfolding Steps

If you need to unfold the wheelchair after the first unpacking or folding, follow these steps:

Step 1: hold point A in the picture with one hand, Lightly push the chair back to lift the front wheels off the ground.and pull the handle along the arrow with the other hand to release the lock hook, then complete the first step of unlocking.

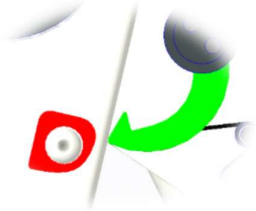

Step 2: when the front and rear wheels are on the ground, press the seat cushion downward along the arrow to complete the frame unlocking.

Step 3: when the "da" locking sound is heard, the chair is completed to unlock, the backrest and footrest should return to the original position, complete all unlocking actions now.

Folding

Folding Steps

For storing and transporting the wheelchair, please follow these steps to fold it after using:

Step 1: Pull the lock pin and fold the anti-tipping wheel And turn the footrest up.

Step 2: Pull the locking rope to release the spring pins from the locking holes on both sides.while push the upper backrest forward.

Step 3: Put down the wheelchair until the rubber connector on the backrest touches the ground.

Step 4: Use the rubber joint as the fulcrum and pull the chair backwards until the it is locked.

Get on from the Side

Step 1: Press the unlock button

Step 2: Press the unlock button while pulling the armrest up.

Step 3: Pull the armrest to the extreme position.

Controller

Controller

There are three external interfaces for controllers in all, which are described as follows:

1. Interface 1 is for the right-side motor. When the right motor fails to drive, please check if the right-side interface is tightened.
2. Interface 2 is for the left-side motor. When the left motor fails to drive, please check if the left-side interface is tightened.
3. Interface 3 is for the joystick. When the current fails to input, please check if the interface is in poor contact, and tighten the securing ring.

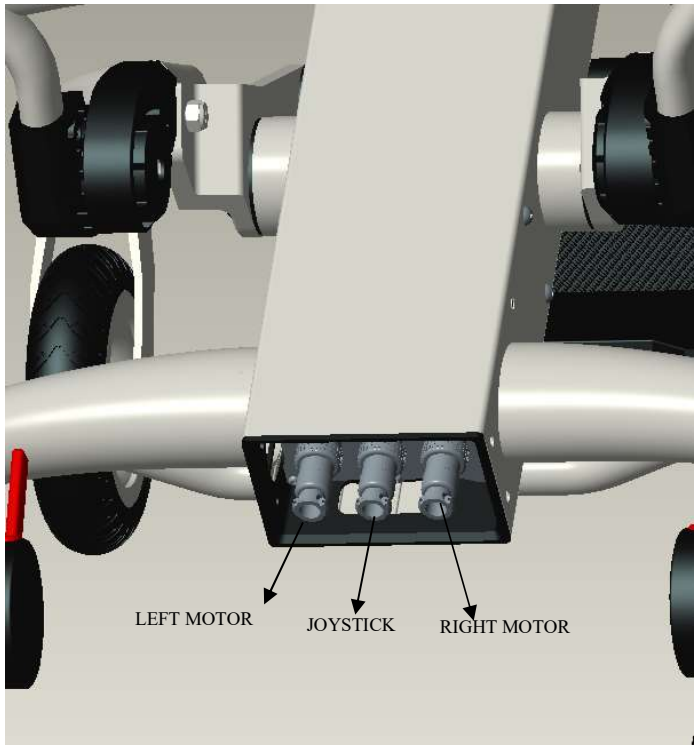

Troubleshooting Table

No.	Problem Cause		Solution
1	Power Problem	1. Faulty connection of the control panel and the connector.	Re-plug the 5-pin plug into the socket on the side of the seat.
		2. Low power supply or the power cut off automatically.	If the power is off automatically, the batteries must be recharged within 2 hours, and should be charged for 6-7 hours.
		3. Fault of the 4-pin plug connecting to the battery	Pull out the battery and check the contact for any fault and re-insert the battery.
2	Control Panel Fault	1. The battery indicator displays red alarm: low battery power.	Charge the battery immediately.
		2. The control panel does not display.	Reconnect the plugs of the two ends of the control panel cable, or replace the control panel.
		3. Communication failure: the controller broadcasts the malfunction sound. The center icon is the exclamation mark. The wheelchair cannot drive.	Power off the wheelchair. Then check if the plug connection of the controller is loose. Reboot after fastening.
		4. The center icon display left/right wheel malfunction. The wheelchair is unable to drive. Left/right motor is broken.	Re-insert and tighten the motor connector and check if the motor unlock button is locked. If the problem cannot be solved, please contact the distributor to repair.
		5. The electromagnetic brake is in “Unlock” position and the wheelchair cannot move.	Push the electromagnetic brake lever to “Lock” position.
3	Motor Fault	1. Noise and vibration occur in the running course of the motor.	Contact the customer service.
4	Battery Range Decreases	1. Drive in the Low temperature environment below zero centigrade.	It is normal as this is the characteristics of lithium batteries.
		2. Drive on the slopes or rough roads.	It is normal as driving on these places can accelerate battery consumption.
		3. Battery use has exceeded its service life.	Contact customer service to replace the battery.
5	Charging Fault	1. Incorrect connection between control panel and plug	Reconnect the 3-pin plug into the battery connector on the side of the seat.
		2. Controller is damaged.	Contact customer service to replace the controller.
		3. Charger plug is damaged.	Contact customer service to replace the charger plug.
		4. Charging plug is loosened.	Recheck and firmly reconnect.
6	Fail to Start When Power On	After not using for a period or the over-discharge protector is activated.	Power on again after charging. If the problem cannot be solved, please contact the distributor to repair.

No.	Problem Cause		Solution
1	Unable to fold	locking assembly	Check if there is something in the lock head that causes the operation jam and can’t move.
		front wheel interference	Check if the front wheel is caught in the frame during folding.

Warranty

Warranty：

Items		
Main Frame	3 years	Incorrect use, damaged or modified by the user will void the warranty and the repair costs will be charged.
Motor	1 year	Damaged due to overload or privately disassembled by the user will void the warranty.
Lithium Battery	1 year	Incorrect charging or disassembled and damaged by the user will void the warranty.
Controller	1 year	Incorrect use, damaged or modified by the user will void the warranty and the repair costs will be charged.
Control Panel	1 year	Incorrect use, damaged or modified by the user will void the warranty and the repair costs will be charged.

Warranty Exclusions

1. The warranty exclusions extend to the following items:
   a) Backrest cushion，seat cushion，the foamed cotton of the armrest and the backrest and other decorations are damaged due to normal use.
   b) Modifications made to the wheelchair without consent.
   c) Components are damaged due to overload.
2. If the serial numbers on the wheelchair are not original or are modified, warranty will be voided.

To the extent permitted by law, this warranty instruction supersedes any other warranties (such as writing, oral, expressive or implicit warranties, including warranties of any merchantability or applicability of special purpose), for any conflicts between the same, this warranty instruction shall prevail.

Packing List

Packing List

Items		
Main Frame	1	/
Lithium Battery	1	/
Control Panel	1	/
Charger	1	/
Owner’s Manual	1	/
Certificate of Inspection	1	/

Below cables information are provided for EMC reference.

Cable	Max. cable length, Shielded/unshielded		Number	Cable classification
AC Power Line	1.8m	unshielded	1 Set	AC Power

Important information regarding Electro Magnetic Compatibility (EMC)
This electric wheelchair needs special precautions regarding EMC and put into service according to the EMC information provided in the user manual; The equipment conforms to this IEC 60601-1-2:2014 standard for both immunity and emissions. Nevertheless, special precautions need to be observed:

- The electric wheelchair with Following ESSENTIAL PERFORMANCE：When release the handle， it brakes automatically and it can park automatically when on ramp. It is intended used in Home healthcare environment.
- WARNING: Use of this electric wheelchair adjacent to or stacked with other equipment should be avoided because it could result in improper operation. If such use is necessary, this equipment and the other equipment should be observed to verify that they are operating normally".

The use of accessories, transducers and cables other than those specified or provided by the manufacturer of this equipment could result in increased electromagnetic emissions or decreased electromagnetic immunity of this equipment and result in improper operation.

- WARNING: Portable RF communications equipment (including peripherals such as antenna cables and external antennas) should be used no closer than 30 cm (12 inches) to any part of the electric wheelchair, including cables specified by the manufacturer. Otherwise, degradation of the performance of this equipment could result."

WARNING: If the use location is near (e.g. less than 1.5 km from) AM, FM or TV broadcast antennas, before using this equipment, it should be observed to verify that it is operating normally to assure that the equipment remains safe with regard to electromagnetic disturbances throughout the expected service life.

Table 1 – Emission

Phenomenon	Compliance	Electromagnetic environment
RF emissions	CISPR 11 Group 1, ClassB	Home healthcare environment
Harmonic distortion	IEC 61000-3-2 Class A	Home healthcare environment
Voltage fluctuations and flicker	IEC 61000-3-3 Compliance	Home healthcare environment

Table 2 - Enclosure Port

Phenomenon	Basic EMC standard	Immunity test levels
		Home healthcare environment
Electrostatic Discharge	IEC 61000-4-2	±8 kV contact ±2kV, ±4kV, ±8kV, ±15kV air
Radiated RF EM field	IEC 61000-4-3	10V/m, 80MHz-2.7GHz, 1kHz, 80% AM 20V/m, 26MHz～2.5GHz, 1kHz, 80% AM
Proximity fields from RF wireless communications equipment	IEC 61000-4-3	Refer to table 3
Rated power frequency magnetic fields	IEC 61000-4-8	30A/m 50Hz or 60Hz

Table 3 – Proximity fields from RF wireless communications equipment

Test frequency (MHz)	Band (MHz)	Immunity test levels
		Home healthcare environment
385	380-390	Pulse modulation 18Hz, 27V/m
450	430-470	FM, ±5kHz deviation, 1kHz sine, 28V/m
710	704-787	Pulse modulation 217Hz, 9V/m
745		
780		
810	800-960	Pulse modulation 18Hz, 28V/m
870		
930		
1720	1700-1990	Pulse modulation 217Hz, 28V/m
1845		
1970		
2450	2400-2570	Pulse modulation 217Hz, 28V/m
5240	5100-5800	Pulse modulation 217Hz, 9V/m
5500		
5785		

Table 4 – Input a.c. power Port

Phenomenon	Basic EMC standard	Immunity test levels Home healthcare environment
Electrical fast transients/burst	IEC 61000-4-4	±2 kV 100kHz repetition frequency
Surges Line-to-line	IEC 61000-4-5	±0.5 kV, ±1 kV
Conducted disturbances induced by RF fields	IEC 61000-4-6	3V, 0.15MHz-80MHz, 6V in ISM and amateur radio bands between 0.15 and 80MHz, 80% AM at 1kHz
Voltage dips	IEC 61000-4-11	0% UT; 0.5 cycle At 0º, 45º, 90º, 135º, 180º, 225º, 270º and 315º
		0%UT/0.5T(0°, 45°, 90°, 135°, 180°, 225°, 270°, 315°); 0%UT/1T(0°); 70%UT /25T(0°);
Voltage interruptions	IEC 61000-4-11	0%UT/250T (0°, 180°)

Table 5 – Signal input/output parts Port

Phenomenon	Basic EMC standard	Immunity test levels Professional healthcare facility environment
Electrical fast transients/burst	IEC 61000-4-4	±1 kV 100kHz repetition frequency
Conducted disturbances induced by RF fields	IEC 61000-4-6	3V, 0.15MHz-80MHz 6V in ISM bands between 0.15MHz and 80MHz 80%AM at 1kHz

ISO 7176-1

Wheelchair tipping angle (degrees)			
Stability direction		Least stable	Most stable
Forward	Front wheels locked	N/A	N/A
	Front wheels unlocked	27.7°	27.7°
Rearward	Rear wheels locked	15.5°	15.5°
	Rear wheels unlocked	20.4°	20.4°
Lateral orientation[1]	Left	19.6°	19.6°
	Right	20.5°	20.5°

Anti-tip device tipping angle				
Stability direction	Least effective	Most effective		Dose device prevent tipping over?
Anti-tip device	Rearward	17.5°	17.5°	Yes,15.5°
	Forward	N/A	N/A	N/A

1 With lockable wheels locked

ISO 7176-3

Table 2	Results of brake tests					P
Parking brake tests						
Maximum slope uphill	23.7° (only tested to angle of 45° due to angle limited by test device)					
Maximum slope downhill	16.0° (only tested to angle of 45° due to limited by test device)					
Brake operating force	2.8 N					
Running brake tests						
Test plane inclination	Direction of travel	Maximum speed (m/s)	Normal operation (m)	Reverse command (m)	Emergency operation (m)	Comments
Horizontal	Forwards	1.19	0.57	0.43	0.51	
Horizontal	Reverse	0.42	0.49	0.39	0.40	
3°	Forwards downhill	1.41	0.75	0.70	0.74	
3°	Reverse downhill	0.53	0.49	0.25	0.43	
6°	Forwards downhill	1.48	0.77	0.79	0.63	
6°	Reverse downhill	0.59	0.44	0.23	0.36	
10°	Forwards downhill	-	-	-	-	
10°	Reverse downhill	-	-	-	-	
Maximum slope specified by the manufacturer	Forwards downhill	-	-	-	-	Maximum slope 6°
Maximum slope specified by the manufacturer	Reverse downhill	-	-	-	-	Maximum slope 6°
Brake operating force		Brake automatically after released the speed lever.				

ISO 7176-5

Wheelchairs without handrims		
Clause	Measurement items	Measured values
8.2	Full overall length	930mm
8.3	Overall width	640mm
8.5	Stowage length	930mm
8.6	Stowage width	640mm
8.7	Stowage height	950mm
8.8	Rising	N/A
8.9	Total mass	25.4kg
8.10	Mass of heaviest part	N/A
8.11	Pivot width	N/A
8.12	Reversing width	N/A
8.13	Turning diameter	1440mm
8.14	Ground clearance	40mm
8.15	Required width of angled corridor	1020mm
8.16	Required doorway entry depth	1020mm
8.17	Required corridor width for side opening	970mm

ISO 7176-7

Measurement	Dimension No.	Fixed or minimum value	Maximum value, if relevant
Seat plane angle	(1)	4°	°
Effective seat depth	(2)	420mm	mm
Seat width	(3)	475mm	mm
Effective seat width	(4)	475mm	mm
Seat surface height at front edge	(5)	540mm	mm
Backrest angle	(6)	80°	°
Backrest height	(7)	450mm	mm
Backrest width	(8)	400mm	mm
Headrest in front of backrest	(9)	N/A	N/A
Headrest height above seat	(10)	N/A	N/A
Footrest-to-seat distance	(11)	420mm	mm
Footrest clearance	(12)	100mm	mm
Footrest length	(13)	207mm	mm
Footrest-leg-angle	(14)	90°	°
Leg-to-seat-surface angle	(15)	90°	°
Armrest-to-seat distance	(16)	240mm	mm
Front armrest-to-backrest distance	(17)	335mm	mm
Armrest length	(18)	350mm	mm
Armrest width	(19)	60mm	mm
Armrest angle	(20)	4°	°
Distance between armrests	(21)	460mm	mm
Front location of armrest structure	(22)	315mm	mm
Handrim diameter	(23)	mm	mm
Propelling wheel diameter	(24)	310mm	mm
Horizontal location of axle	(25)	90mm	mm
Vertical displacement of wheel axle	(26)	345mm	mm
Castor wheel diameter	(27)	170mm	mm

The wheelchair met all of the requirements of ISO 7176-9

The product met all the requirements of ISO 7176-14;

The forces necessary to operate the control devices (Operate the lever: 3.0N; Button: 1.9N)

This product meets ISO7176-16 testing requirements

The expected service life of this product is 5 years